FIRST ANGLE PROJECTION

(ALL DIMENSIONS ARE IN mm.)

DRG. NO. 0 439 20 41 001

TOOL LIST		
ITEM	TOOL	DESCRIPTION
ASSY	1457901	BRUSH HOLDER SLOT CHECKING FIXTURE
ASSY	1457863	BRUSH HOLDER CHECKING FIXTURE
ASSY	1458226	11·4 SLIP GAUGE

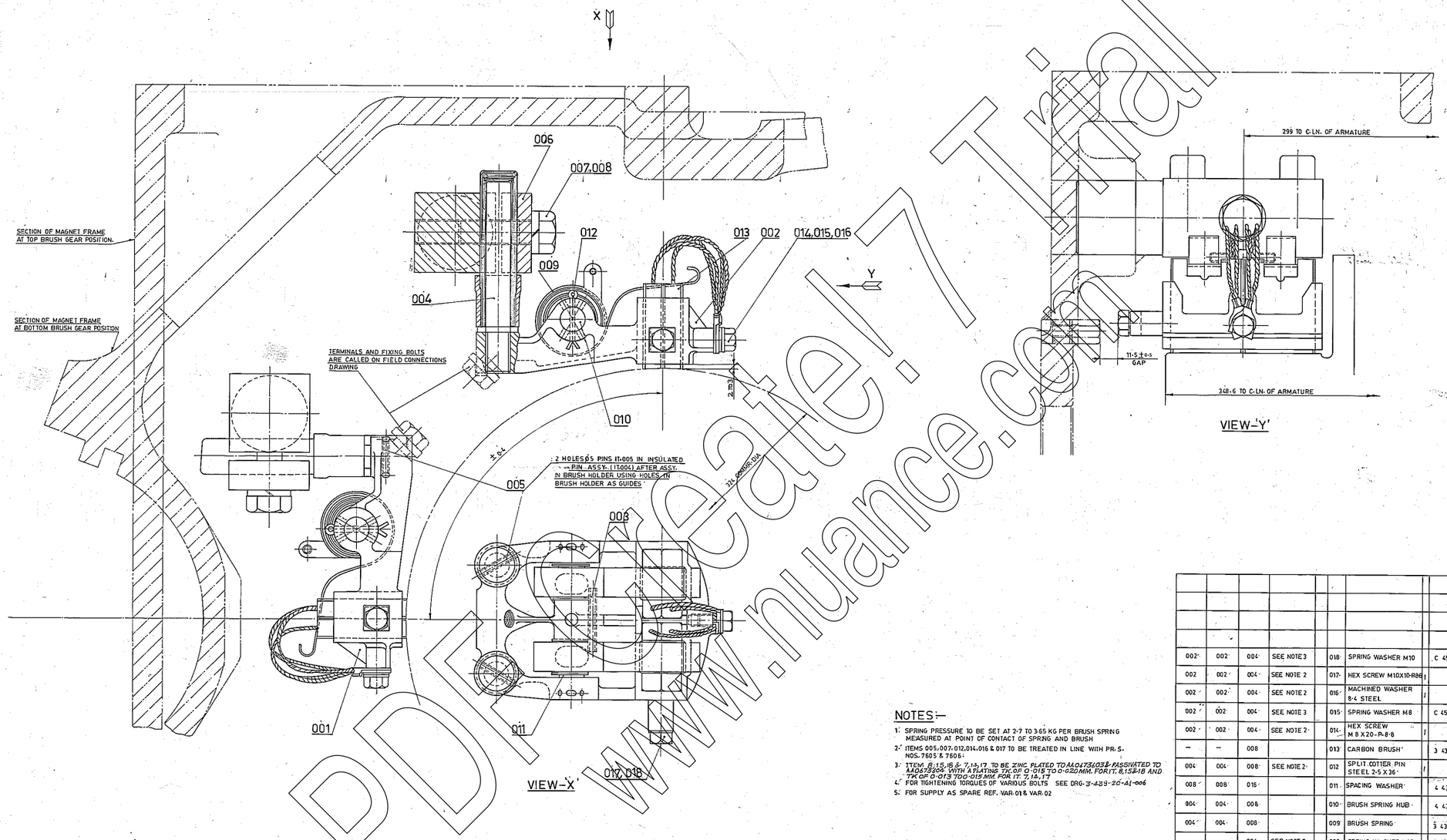

NOTES:-

1. SPRING PRESSURE TO BE SET AT 2·7 TO 3·65 KG PER BRUSH SPRING MEASURED AT POINT OF CONTACT OF SPRING AND BRUSH
2. ITEMS 005,007,012,014,016 & 017 TO BE TREATED IN LINE WITH PR. S. NOS. 7605 & 7606.
3. ITEM 8,11,15,16 & 7,13,17 TO BE ZINC PLATED TO AA0473(03) & PASSIVATED TO AA0673(04) WITH A PLATING TK OF 0·015 TO 0·020MM. FOR IT. 8,11,15,18 AND TK OF 0·013 TO 0·015 MM. FOR IT. 7, 13, 17
4. FOR TIGHTENING TORQUES OF VARIOUS BOLTS SEE DRG-3-439-20-41-006
5. FOR SUPPLY AS SPARE REF. VAR-01 & VAR-02

VAR-02	VAR-01	VAR 00	REMARKS	IVAR NO	ITEM NO	DESCRIPTION	DRAWING NO.	ITEM NO	CARD TYPE-2 VAR.	MATL CODE / MATL SPECN.	A CTL	UNIT	UNIT WT. / QTY.	NOS.	CODE
002	002	004	SEE NOTE 3		018	SPRING WASHER M10	C 450056	003				KG	0·01		
002	002	004	SEE NOTE 2		017	HEX SCREW M10X10-R8E				AA7121123		KG	0·02		
002	002	004	SEE NOTE 2		016	MACHINE WASHER 8·4 STEEL				AA7161601056		KG	0·02		
										AA7161601					
002	002	004	SEE NOTE 3		015	SPRING WASHER M8	C 450056	002				KG	0·01		
002	002	004	SEE NOTE 2		014	HEX SCREW M 8 X 20-P-8·8				AA7121123118		KG	0·01		
										AA7121123					
—	—	008			013	CARBON BRUSH	3 439 20 41 005	001				KG	0·15		
								00							
004	004	008	SEE NOTE 2		012	SPLIT COTTER PIN STEEL 2·5 X 36				AA7171089		KG	0·01		
008	008	015			011	SPACING WASHER	4 439 20 41 002	001				KG	0·01		
								00							
004	004	008			010	BRUSH SPRING HUB	4 439 20 41 001	002				KG	0·06		
								00							
004	004	008			009	BRUSH SPRING	3 439 20 41 002	001				KG	0·11		
								00							
—	—	004	SEE NOTE 3		008	SPRING WASHER M16	C 450056	005				KG	0·01		
—	—	004	SEE NOTE 2&4		007	HEX-BOLT M16X50R-8·8				AA7111122 40		KG	0·10		
										AA7111122					
—	—	004			006	BRUSH HOLDER SUPPORT CLAMP	3 439 20 41 001	001				KG	2·50		
								00							
004	004	008	SEE NOTE 2 STAM 9464240/3		005	SPG-DOWEL SLEEVE HEAVY Ø5x30				15·5988		KG	0·01		
004	004	008			004	BRUSH HOLDER INSULATED PIN ASSY.	3 439 20 41 003					KG	0·25		
								00							
002	002	004			003	SPG-DOWEL SLEEVE	1 439 20 41 001	003				KG	0·01		
								00							
002	—	002			002	BRUSH HOLDER (R-H.)	1 439 20 41 001	001				KG	1·5		
								00							
—	002	002			001	BRUSH HOLDER (L-H.)	1 439 20 41 001	001				KG	1·5		
								00							

CARD TYPE-3 — CARD TYPE-1 — CARD TYPE-2

ADDITIONAL INFORMATION

STATUS OF DRAWING

DISTRIBUTION OF PRINTS
O/C - 1 TXM - 3
TH X(100)-1 TXS SERVICE CELL-3

TYPE OF PRODUCT OR NAME OF CUSTOMER/PROJECT: TRACTION MOTOR TM 4601 AZ & TM 4603 AZ/BZ — M G DE LOCO TM 4601 BX

BHARAT HEAVY ELECTRICALS LIMITED BHOPAL

	NAME	SIGN.	DATE
DRN.	BHASKAR		12-2-96
CHD.	SGD		23-2-96
APPD	SKB		20-2-96

DEPT	ITEM CODE	GRADE OF UN. TOL.	SCALE	WEIGHT (Kg)	REF. TO ASSY. DRG.	ITEM NO.	NO. OF ITEMS
	105	DIM/ANG	1:1	13·5	1439 10 41 001	018	02

TITLE: BRUSH GEAR ASSEMBLY

DRAWING NO. 0 439 20 41 001 (SHEET NO. 01 OF 01 SHEETS)

S.E.S.BPL.

SIZE A0

REV	DATE	ALTD.	REMARKS
03	14-8-92	GKD	BOM UPDATED.
02	16-10-91	GKD	RADIAL CLEARANCE BETWEEN BRUSH HOLDER & COMMUTATOR 2 TO 3 WAS 1·6
1	27-7-90		IN NOTE 003 ZINC PLATED & PASSIVATED FROM SPEC. HEDG NOT ON PLATING THICKNESS WAS NOTCH.

THE INFORMATION ON THIS DOCUMENT IS THE PROPERTY OF BHARAT HEAVY ELECTRICALS LIMITED. IT MUST NOT BE USED DIRECTLY OR INDIRECTLY IN ANY WAY DETRIMENTAL TO THE INTEREST OF THE COMPANY.

PDF Create! 7 Trial www.nuance.com

File No. HEP-TPTN0GMO(Misc)/229/2026-HEP-TXM20581 (Computer No. 319994)
Generated from eOffice by K V Suhas, DM(SKV)-MNX35408-HER, DM, HEP-HEAVY ELECTRICALS PLANT (HER) on 08/07/2026 08:27 am

FIRST ANGLE PROJECTION

(ALL DIMENSIONS ARE IN mm)

DRG. NO. 3-439-20-41-005

THE INFORMATION ON THIS DOCUMENT IS THE PROPERTY OF BHARAT HEAVY ELECTRICALS LIMITED
IT MUST NOT BE USED DIRECTLY OR INDIRECTLY IN ANY WAY DETRIMENTAL TO THE INTEREST OF THE COMPANY

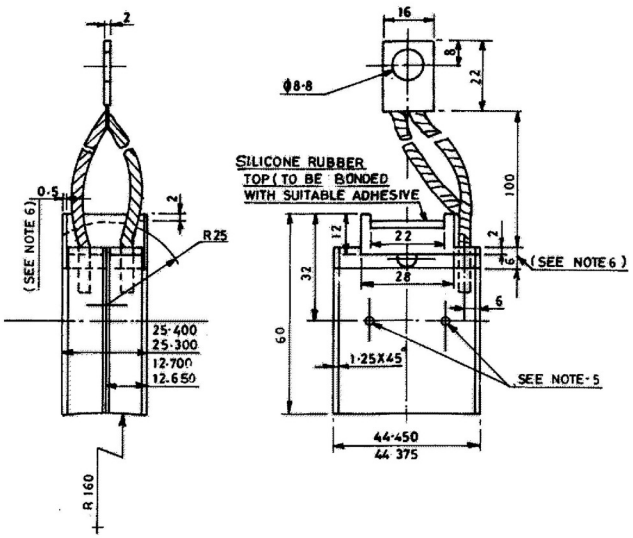

NOTES:-

1. ~~CARBON BRUSH GRADE - EG14D (M) OR SG 7097 (LC) OR E88 X (ELCA)~~
2. TECHNICAL DATA OF BRUSH GRADE VIZ. APPARENT DENSITY, SHORE HARDNESS, TRANSVERSE STRENGTH, SPECIFIC RESISTANCE, CONTACT VOLTAGE DROP, CO-EFFICIENT OF FRICTION AND MATERIAL DETAILS OF RUBBER TOP ARE TO BE SUPPLIED ALONG WITH QUOTATION TO ENABLE CONSIDERATION OF THE OFFER.
3. CARBON BRUSH SHALL CONFORM TO (I.S. 3003) UNLESS OTHERWISE STATED.
4. BRUSH GRADE AND MANUFACTURERS NAME / TRADE MARK SHELL BE ENGRAVED ON BOTH THE WIDER FACES ABOVE THE CONDEMNING MARK
5. CONDEMNING MARK SHALL BE MADE ON TWO WIDER FACES.
6. A GROOVE OF 0.5 X 6 PROVIDED TO AVOID GLUE / RUBBER STICKING IN BRUSH HOLDER IS ALSO ACCEPTABLE.
7. TOLERANCE ON UNTOLERATED DIMN. TO BE ± 0·25 MM.
8. REFER TM 98262 FOR ACCEPTANCE OF CARBON BRUSH.
9. APPROVED CARBON BRUSH GRADES
   1. EG14D(1) 6F ASSAM CARBON PRODUCTS LTD.
   2. E88X(1) OF MERSEN INDIA PVT. LTD.
   3. EG-7097 OF MERSEN/FRANCE

VAR. OO	REMARKS	VAR. NO.	ITEM NO.	DESCRIPTION	STD.	DRAWING NO.	IT NO.	MATL. CODE	A/C	UNIT	UNIT WT.	GS
001	B.O. ST. NO. 454160 SEE NOTES		001	SPLIT CARBON BRUSH						KG	0.15	
28 → CARD TYPE-3			28 → CARD TYPE-1				28 → CARD TYPE-2					

REF. DRG. NO.

REV	DATE	ALTD	REMARKS
08	14-2-09	CKD-MC	NOTE 9 MODIFIED.
09	16.11.24	ALT-VK CKD-BKT	NOTE 9 MODIFIED.

SIGN. & DATE

REV	DATE	ALTD	REMARKS
07	27-2-08	CKD	NOTE 9 WAS NOT ON.
06	27-01-03	ALTD CKD	IN NOTE 1 E88 x (ELCA) WAS ON. IN TITLE M/C. REF TM-4601 BX WAS NOT ON.

INVENTORY NO.

REV.	DATE	ALTD	REMARKS
05	8-1-99	ALTD CKD	NOTE-8 WAS NOT ON.
04	24.8.94	ALTD CKD	NOTE-7 WAS NOT ON.
03	3.11.92	ALTERED CHECKED	DRG. REVISED & RETRACED.

ADDITIONAL INFORMATION

STATUS OF DRAWING

DISTRIBUTION OF PRINTS
TME - 1, TXM - 4 TNX [illegible]

TYPE OF PRODUCT OR NAME OF CUSTOMER / PROJECT: TM 4601 AZ/BX & TM 4603 BZ/TM 4605 — MG DE LOCO ACEMU

BHARAT HEAVY ELECTRICALS LTD. BHOPAL

	NAME	SIGN	DATE
DRN.	CKSB	-Sd-	10-2-88
CHD.	SGD	-Sd-	26-2-88
APPD.	SKB	-Sd-	20-5-88

NO. OF VAR. 00

DEPT.	GRADE OF UN.TOL. DIM.	SCALE	WEIGHT (Kg)	REF. TO ASSY. DRG.	ITEM NO.	NO. OF ITEMS
TME CODE 405	±/M/F	N.T.S.	0.15	0 439 20 41 005	013	00

TITLE: CARBON BRUSH (SPLIT) WITH FLEXIBLES & TERMINAL

CARD CODE

DRAWING NO. 3 439 20 41 005 REV. 09

SHEET NO. 01 NO. OF SHEETS 01

SIZE A3

FIRST ANGLE PROJECTION

DRG. NO. 1 439 20 40 001

(ALL DIMENSIONS ARE IN mm)

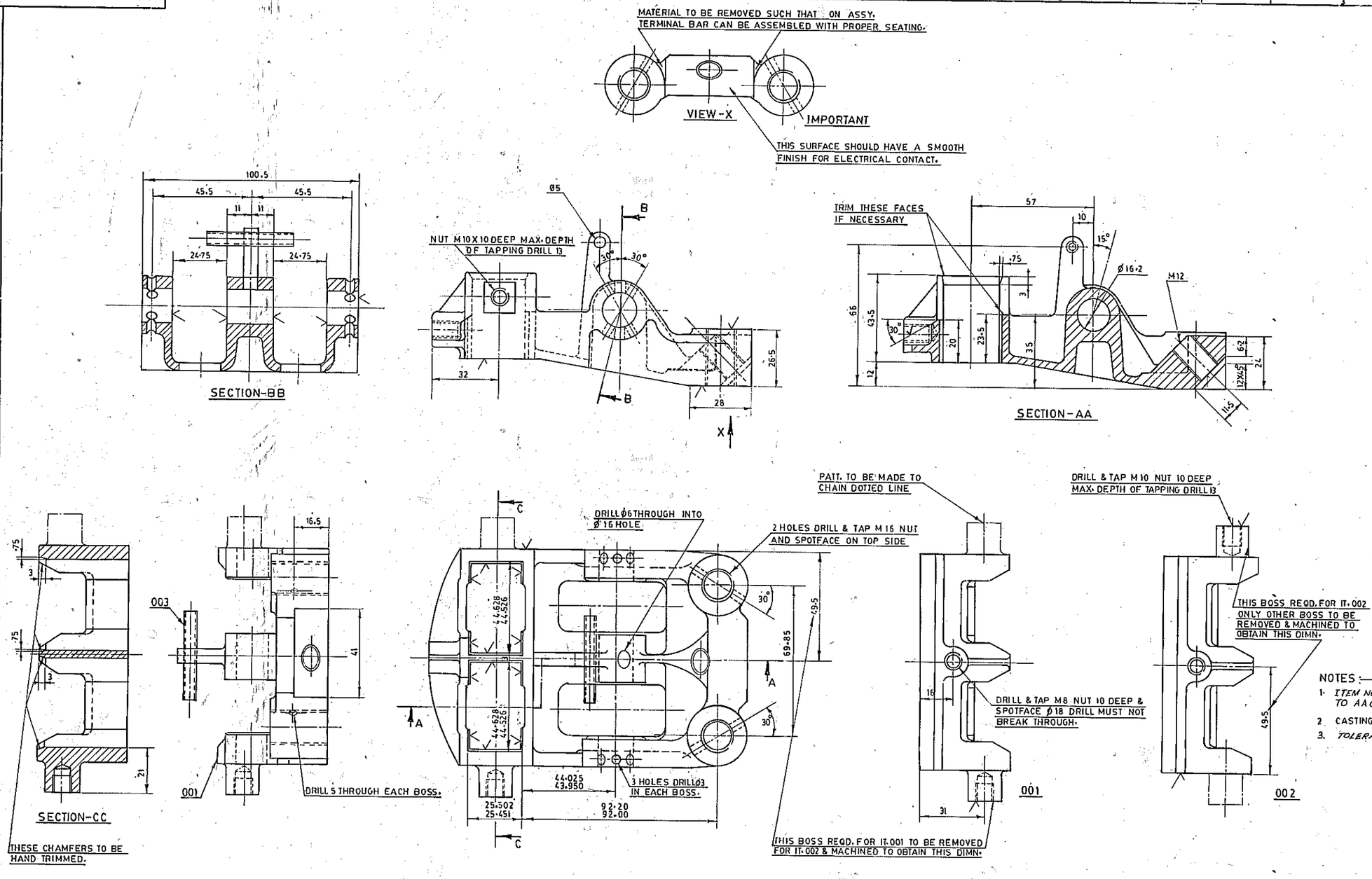

TOOL LIST		
ITEM	TOOL	DESCRIPTION
001	1459168	24mm SLOTTING TOOL FOR ROUGH FINISH BRUSH GUIDE.
001	1451144	60° ANGLE PLATE.
001	1451608	SLOTTING TOOL FOR BRUSH GUIDE.
001	1454135	MILLING FIX. FOR SKIMMING BOTTOM FACE.
001	1454136	MILLING FIX. FOR SKIMMING TOP FACE.
001	1454138	SLOTTING FIXTURE.
001	1454141	ANGLE PLATE FOR USE WITH MILLING FIX. 1454140.
001	1454142	MILLING FIX. FOR SPRING SEATING.
001	1454145	M.O. TEMPLATE FOR MARKING SLOTS.
001	1454146	SLOTTING GAUGE.
001	1454147	FINISH SLOTTING TOOL.
001	1454148	BROACHING FIX. WITH-2 SUPPORT BLOCKS.
001	1454150	GAUGE FOR SLOTS (FINAL)
001	1457801	M.FIX. FOR BOTTOM FACE 45° ANGLE & BOSS.
001	1457802	D.J. FOR ALL HOLES EXCEPT SPLIT PIN HOLES.
001	1457803	D.J. FOR Ø3·5 HOLES FOR SPLIT PIN HOLES.
001	1457839	ANGLE PLATE.
001	1451609	ACCEPTANCE GAUGE FOR SLOTTING BRUSH GUIDE.
001	1454137	M.O. TEMPLATE FOR MARKING SLOTS.
001	1454139	BROACHING FIX. WITH-2 SUPPORT BLOCKS.
001	1454140	M.FIX. FOR M/CG B.FACE TAKING LOCATION FROM FINISHED SLOTS.
001	1451146	BROACH

NOTES :—

1. ITEM NO. 3 TO BE ZINC PLATED TO AA0673603 & PASSIVATED TO AA0673604 WITH A PLATING THICKNESS OF 0·015 TO 0·020 MM.
2. CASTING TO DRG. 1 439 20 41 002 (01)
3. TOLERANCE ON UNTOLERATED DIMN TO BE ±0·25 MM

VAR OO	REMARKS	VAR NO.	ITEM NO.	DESCRIPTION	STD.	DRAWING NO.	VAR	MATL CODE	MATL SPCN.	UNIT WT.	QTY	ZONE
002	B.O. SEE NOTE 1		003	SPG. DOWEL SLEEVE (HEAVY) Ø5X40				IS: 5988		0·01		C-4
001			002	BRUSH HOLDER R.H.		1 439 20 41 002	001 00			1·5		C-5
001			001	BRUSH HOLDER L.H.		1 439 20 41 002	001 00			1·5		C-5

28 → CARD TYPE-3 28 → CARD TYPE-1 28 → CARD TYPE-2

ADDITIONAL INFORMATION

STATUS OF DRAWING

DISTRIBUTION OF PRINTS
O/C - 1 TXM - 3
TCX(TXM) - 1

TYPE OF PRODUCT OR NAME OF CUSTOMER/PROJECT: TRACTION MOTOR TM 4601AZ & TM 4603BZ
MG. DE. LOCO, AC EMU

BHARAT HEAVY ELECTRICALS LTD
BHOPAL

	NAME	SIGN	DATE
DRN.	RYADAVRIDHA		10.2.00
CHD.	SGD		26.2.00
APPD.	SKB		20-5-00

NO. OF VAR 00

DEPT. TME | CODE 405 | GRADE OF UPL TOL. DIM. | SCALE 1:1 | WEIGHT (Kg) — | REF. TO ASSY. DRG 0 439 20 41 001 | ITEM NO. 001 TO 003 | NO. OF ITEMS 3

TITLE: BRUSH HOLDER

DRAWING NO. 1 439 20 41 001 REV. 03

SHEET NO. 01 NO. OF SHEETS 01

S.E.S. BPL. SIZE A1

REV	DATE	ALTD	CKD	REV	DATE	ALTD	CKD	REV	DATE	ALTERED	CHECKED
03	24.8.94			02	14.10.92			1	25.7.87		
	NOTE-3 WAS NOT ON.				BOM UPDATED.				IN NOTE 1 ZINC PLATED & PASSIVATED PROC. SPEC WERE NOTE ON. PLATING THICKNESS WAS NOT ON.		

THE INFORMATION ON THIS DOCUMENT IS THE PROPERTY OF BHARAT HEAVY ELECTRICALS LIMITED. IT MUST NOT BE USED DIRECTLY OR INDIRECTLY IN ANY WAY DETRIMENTAL TO THE INTEREST OF THE COMPANY.

F 4625531 REV 03 SEE DRG. NO.

INVENTORY NO. | SIGN & DATE

FIRST ANGLE PROJECTION

(ALL DIMENSIONS ARE IN mm)

DRG. NO. 1 439 20 40 002

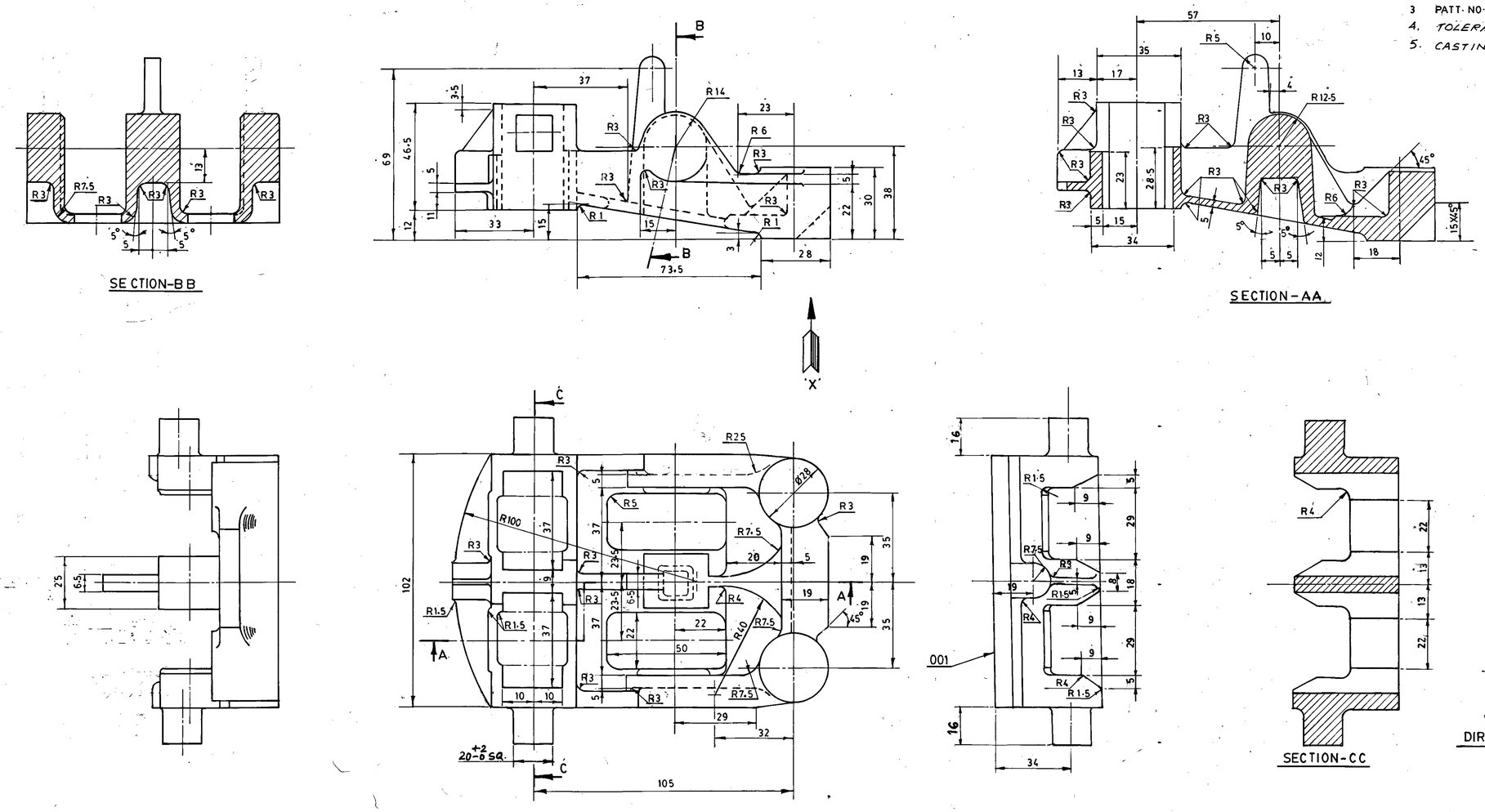

NOTES :—

1. ALTERNATIVELY, MATERIAL FOR BRUSH HOLDER CASTING CAN BE AA19941
2. PATT. NO. 1245172 IS FOR SAND CASTING OF IT. 001
3. PATT. NO. 1150002 IS FOR SHELL MOULDING OF IT. 001
4. TOLERANCE ON UNTOLERATED DIMN TO AA 0230402 CLASS III
5. CASTINGS ARE TO BE SAND BLASTED.

VAR NO	REMARKS	VAR NO.	ITEM NO.	DESCRIPTION	STD.	DRAWING NO.			
001	SEE NOTES ST-NO-454109	001		BRUSH HOLDER CASTING (BRONZE)		1			

CARD TYPE-3 / CARD TYPE-1 / CARD TYPE-2

MATL. CODE	AA 19941
MATL. SPCN.	
UNIT WT.	1·5
QTY	

ADDITIONAL INFORMATION

STATUS OF DRAWING

DISTRIBUTION OF PRINTS
OC—1, TNX—1, FYM—5, TXM—3

TYPE OF PRODUCT / NAME OF CUSTOMER/PROJECT: TRACTION MOTOR, TM4601AZ & TM4603 & TM4601 BY
MG. DE. LOCO, AC EMU

BHARAT HEAVY ELECTRICALS LTD
BHOPAL

	NAME	SIGN	DATE
DRN.	Bhadauria		5-1-88
CHD.	S G D		26-2-88
PRD	S.K.B		20-5-88

NO. OF VAR: 00

DEPT. TME CODE 405 | GRADE OF UN-TOL. DIM. C/MP | SCALE 1:1 | WEIGHT (kg) 1·5 | REF. TO ASSY. DRG. 1 439 20 41 001 | ITEM NO. 001 002 | NO. OF ITEMS 002

TITLE: SAND CASTING FOR BRUSH HOLDER

CARD CODE

DRAWING NO. 1 439 20 41 002 | REV. 05 | SHEET NO. 01 | NO. OF SHEETS 01

S.E.S. BPL | SIZE A1

REV.	DATE	ALT.	REV.	DATE	ALT.	REV.	DATE	ALT.	REV.	DATE	ALT.	REV.	DATE	ALTERED
05	11-09-18	CHD. S.B.	04	18-7-07	CHD	03	3-5-96	CKD.	02	24-8-94	CKD	01	14-10-92	CHECKED
3/9	DIMN. 20+2 -0 SQ WAS 16SQ.			IN BOM IT 001 PATT. IS DEN AA19941 WAS AA19943.			NOTE-5 WAS NOT ON. M/C REF. TM 4601 BY WAS NOT ON.			NOTE-4 WAS NOT ON.			BOM UPDATED.	

THE INFORMATION ON THIS DOCUMENT IS THE PROPERTY OF BHARAT HEAVY ELECTRICALS LIMITED. IT MUST NOT BE USED DIRECTLY OR INDIRECTLY IN ANY WAY DETRIMENTAL TO THE INTEREST OF THE COMPANY.

F46225530 REF. DRG. NO.

SIGN. & DATE

INVENTORY NO.

File No: HEP-TPTNOGMO(Misc)/229/2026-HEP-TXM20581 (Computer No. 319994)
Generated from eOffice by K.V Suhas, DM(SKV)-MNX35408-HEP, DM, HEP-HEAVY ELECTRICALS PLANT (HEP) on 08/07/2026 08:27 am

FIRST ANGLE PROJECTION

(ALL DIMENSIONS ARE IN mm)

DRG. NO. 3 439 20 41 003

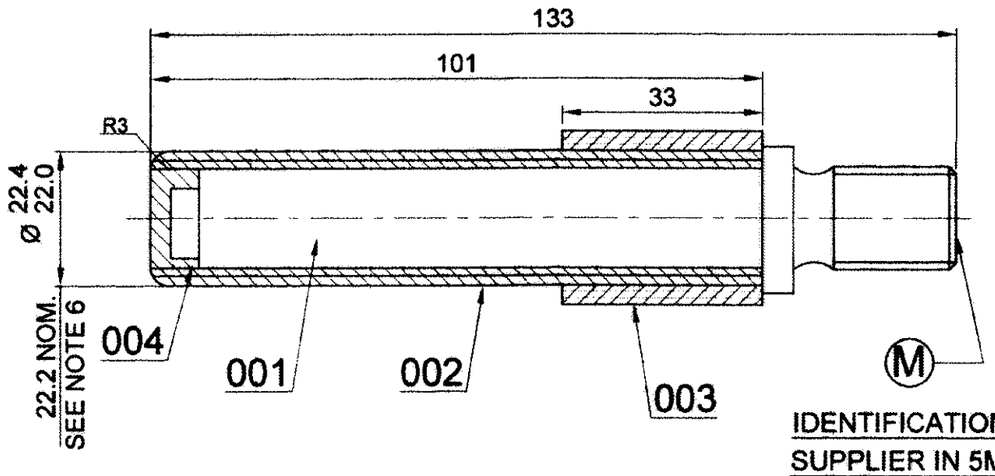

IDENTIFICATION MARK OF SUPPLIER IN 5MM HEIGHT.

NOTES :-

1. ~~IT. 003 TO BE ASSEMBLED AT A TEMPERATURE OF 190° C MIN. & 200° C MAX.~~
2. ~~INSULATED PIN TO BE TESTED TO EARTH AT 9 KV FOR ONE MINUTE.~~
3. ~~THIS PIN IS ALTERNATIVE TO PIN DRG. NO. D 4775612~~
4. ~~THE ASSEMBLY OF ITS. 001 TO 003 TO BE BOUGHT OUT.~~
5. ~~STYLE NO. 454290 IS FOR ITS. 001,002 & 003.~~
6. DIA SHOULD BE CONCENTRIC.
7. ~~APPLY A THIN & UNIFORM COAT OF EPOXY GEL-COAT (DR. BECK & CO) ON F.R.P MOULDING BEFORE ASSEMBLING OF IT. 003.~~
8. TOLERANCE ON UNTOLERATED DIMN. TO BE ±0.25MM.
9. MANUFACTURING TESTING AND SUPPLY OF BRUSH HOLDER INSULATOR PIN TO BE DONE AS PER PROD. STD. TM 97246.

STYLE LIST		
VAR NO.	IT.NO.	ST NO.
00	–	BP9064760594

VAR.00	REMARKS	VAR NO.	ITEM NO.	DESCRIPTION	STD.	DRAWING NO.	IT.NO.	MATL. CODE	A C	UNIT	UNIT WT.	GS
001			004	EPOXY MOULDING CAP		3 439 20 41 004	002		-	KG	0.010	
001			003	INSULATOR		C450087	002		-	KG	0.02	
001			002	GLASS CLOTH				AA 25601	-	KG	0.05	
001			001	SUPPORT PIN		3 439 20 41 004	001		-	KG	0.18	

28 — CARD TYPE-3 | 28 — CARD TYPE-1 | 28 — CARD TYPE-2

ADDITIONAL INFORMATION

STATUS OF DRAWING

DISTRIBUTION OF PRINTS
TME -1 TNX -1
TXM -3

TYPE OF PRODUCT OR NAME OF CUSTOMER/PROJECT: TRACTION MOTOR TM 4601AZ & TM4603BZ MG DE LOCO, AC EMU

BHARAT HEAVY ELECTRICALS LTD. BHOPAL

	NAME	SIGN	DATE	NO. OF VAR.
DRN	BHADAURIA	Sd	11.2.88	
CKD	SGD	Sd	26.2.88	
APPD	SKB	Sd	20.5.88	01

REV.	DATE	ALTERED / CHECKED / APPD.
07	2-3-12	NOTE-9 WAS NOT ON. NOTE 4 WAS ON.
06	07.03.09	ALTERED KANSARA; DRAWING UPDATED & DIGITIZED.

DEPT.	UNTOL. DIMS. GR.	SCALE	WEIGHT(K.G.)	REF.TO ASSY.DRG.	ITEM NO.	NO.OF ITEM
T.M.E CODE 405	M	NTS	0.25	0 439 20 41 001	004	004

TITLE: MOULDED BRUSH HOLDER INSULATOR PIN

DRAWING NO. 3 439 20 41 003 — REV. 07

SHT. NO. 01 — NO. OF SHT. 01

A3 SIZE

THE INFORMATION ON THIS DOCUMENT IS THE PROPERTY OF BHARAT HEAVY ELECTRICALS LIMITED. IT MUST NOT BE USED DIRECTLY OR INDIRECTLY IN ANY WAY DETRIMENTAL TO THE INTEREST OF THE COMPANY.

REF. DRG. NO. D 4776178

SIGN. & DATE

INVENTORY NO.

File No. HEP-TPTN0GMO(Misc)/229/2026-HEP-TXM20581 (Computer No. 319994)
Generated from eOffice by K V Suhas, DM(SKV)-MNX35408-HEP, DM, HEP-HEAVY ELECTRICALS PLANT (HEP) on 08/07/2026 08:27 am

FIRST ANGLE PROJECTION

(ALL DIMENSIONS ARE IN mm)

DRG. NO. 3 439 20 41 004

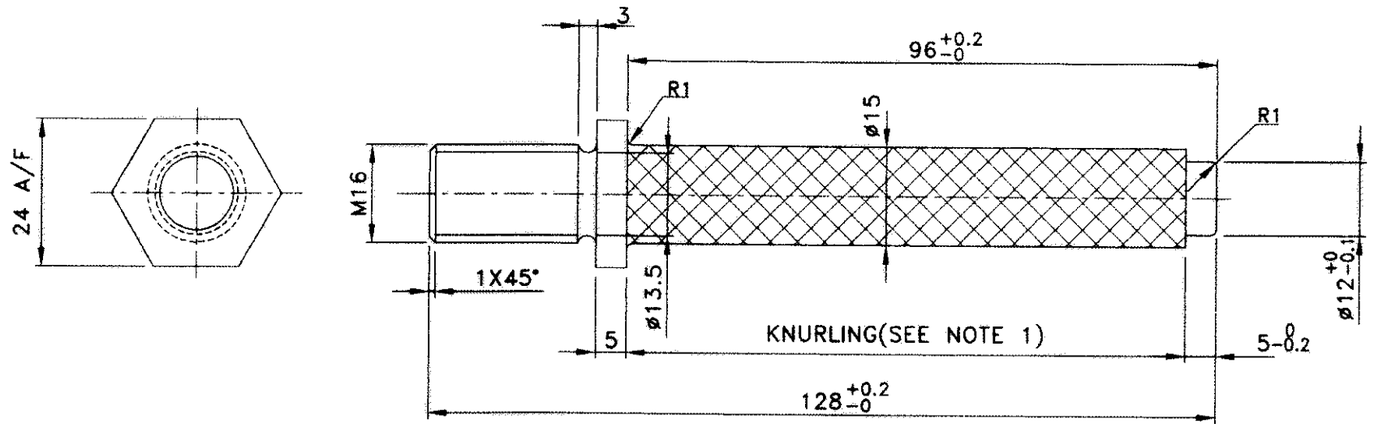

NOTES:-

1. *PINS TO BE KNURLED FOR THIS LENGTH.*
2. *MATERIAL TO BE BRT. STEEL HEX. BAR TO AA 10112.*
3. *MACHINE ALL OVER EXCEPT HEXAGONAL PORTION.*
4. *ALTERNATIVELY FORGE THE HEXAGON COLLAR ON ROUND BAR TO AA 10112 & MACHINE ALL OVER.*
5. ~~*TOLERANCE ON DIMN. TO BE ±0.25MM.*~~
6. *IT.001 TO BE ZINC PLATED TO AA 0673603 & PASSIVATED TO AA 0673604 PLATING THICKNESS IS 0.013 TO 0.025MM.*

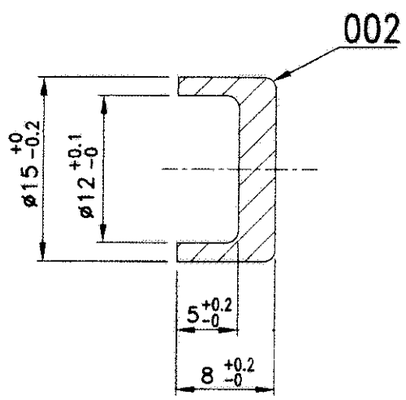

VAR 00	REMARKS	VAR. NO.	ITEM NO	DESCRIPTION	STD.	DRAWING NO.	IT.NO / VAR	MATL. CODE / MATL. SPECN.	C/A	UNIT	UNIT WT. / QTY.	G.S.	ZONE
			002	EPOXY MOULDING CAP 8TK. X 15 O/D				AA 22415		KG.	0.010		
	SEE NOTES		001	SUPPORT PIN 24 A/F X 128 HEX BAR				AA 1010112139 AA 10112		KG.	0.18		

ADDITIONAL INFORMATION

STATUS OF DRAWING

DISTRIBUTION OF PRINTS

TME-1 TXM -4
TNX-1

TYPE OF PRODUCT OR NAME OF CUSTOMER/PROJECT: TRACTION MOTOR TM4601AZ & TM4603BZ MG. DE. LOCO AC EMU

BHARAT HEAVY ELECTRICALS LTD. BHOPAL

	NAME	SIGN	DATE	NO. OF VAR
DRN	CKSB	Sd	16.2.88	
CKD	SGD	Sd	20.2.88	
APPD	SKB	Sd	20.2.88	–

REV.	DATE	ALTERED / CHECKED / APPROVED

REV.	DATE	ALTERED / CHECKED / APPROVED
06	19.02.09	ALTERED KANSARA; CHECKED; APPROVED

DRAWING UPDATED & DIGITIZED.

DEPT	GRADE OF UN.TOL. DIM	SCALE	WEIGHT (K.G.)	REF. TO ASSY. DRG.	ITEM NO.	NO. OF ITEM
TME CODE 405	M AA0230208	NTS	0.18	3 439 20 41 003	002	002

TITLE: BRUSH HOLDER SUPPORT PIN

DRAWING NO. 3 439 20 41 004 REV 06

SHT. No. 01 NO. OF SHT. 01 A3

THE INFORMATION ON THIS DOCUMENT IS THE PROPERTY OF BHARAT HEAVY ELECTRICALS LIMITED
IT MUST NOT BE USED DIRECTLY OR INDIRECTLY IN ANY WAY DETRIMENTAL TO THE INTEREST OF THE COMPANY

REF. DRG. NO. | SIGN. & DATE | INVENTORY NO.

File No. HEP-TPTN0GMO(Misc)/229/2026-HEP-TXM20581 (Computer No. 319994)
Generated from eOffice by K V Suhas, DM(SKV)-MNX35408-HEP, DM, HEP-HEAVY ELECTRICALS PLANT (HEP) on 08/07/2026 08:27 am

PRODUCED BY AN AUTODESK EDUCATIONAL PRODUCT

FIRST ANGLE PROJECTION

(ALL DIMENSIONS ARE IN mm)

DRG. NO. 3 439 20 41 001

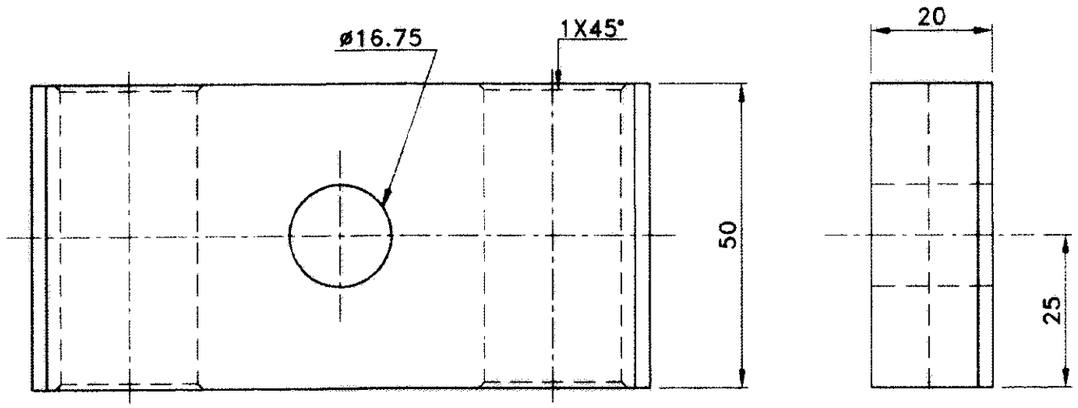

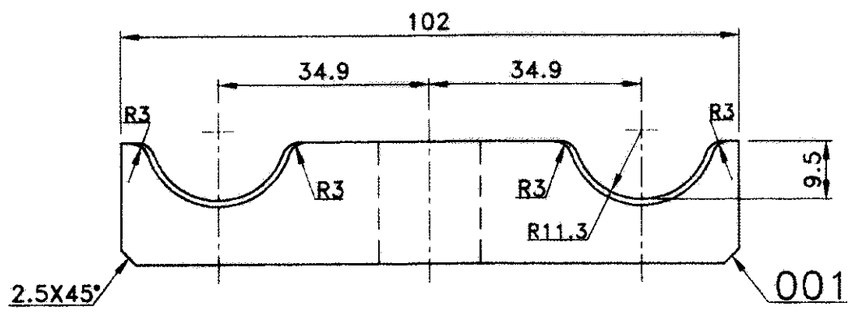

TOOL LIST		
IT.NO.	TOOL NO.	DESCRIPTION
001	1451156	DRILL JIG
001	1451157	ø22.60 CONVEX MILLING CUTTERS
001	1451158	SPACING BUSH 31.75 I.D. 44.45 O.D.X47.244LG.
001	1451159	10 LOCATORS
001	1450731	MILLING FIXTURE
001	1406649	CHAMFERING FIXTURE

STYLE LIST		
VAR	IT.NO.	ST NO.
–	001	BP9094760622

NOTES:–

1. IT. 001 TO BE ZINC PLATED TO AA 0673603 AND PASSIVATED TO AA0673604, WITH A PLATING THICKNESS OF 0.015 TO 0.020MM.
2. ~~TOLERANCE ON UNTOLERATED DIMN. TO BE ±0.25MM~~

VAR 00	REMARKS	VAR. NO.	ITEM NO	DESCRIPTION	STD.	DRAWING NO.	IT.NO / VAR	MATL. CODE / MATL. SPECN.	A/C	UNIT	UNIT WT. / QTY.	G.S.	ZONE
–			001	CLAMPING BLOCK 20TK.X50X102				AA 1010212095 / AA 10112	–	KG.	0.50		

ADDITIONAL INFORMATION

STATUS OF DRAWING

DISTRIBUTION OF PRINTS

TME-1 TXM-3
TNX-1

TYPE OF PRODUCT OR NAME OF CUSTOMER/PROJECT: TRACTION MOTOR TM4601AZ & TM4603BZ MG DE LOCO, AC EMU

BHARAT HEAVY ELECTRICALS LTD. BHOPAL

	NAME	SIGN	DATE
DRN	BHADAURIA	Sd	10.2.88
CKD	SGD	Sd	26.2.88
APPD	SKB	Sd	20.5.88

NO. OF VAR: –

REV.	DATE	ALTERED / CHECKED / APPROVED

REV.	DATE	ALTERED / CHECKED / APPROVED
04	24.03.09	KANSARA / CHECKED / APPROVED

DRAWING UPDATED & DIGITIZED.

DEPT TME; CODE 405

GRADE OF UNTOL. DIM. E/N/F: AA 0230208

SCALE: NTS

WEIGHT (KGS): 0.50

REF. TO ASSY. DRG.: 0 439 20 41 001

ITEM NO.: 006

NO. OF ITEM: 001

TITLE: BRUSH HOLDER CLAMP

DRAWING NO.: 3 439 20 41 001

REV: 04

SHT. No. 01 NO. OF SHT. 01

A3

REF. DRG. NO. D 4775750

SIGN. & DATE

INVENTORY NO.

PRODUCED BY AN AUTODESK EDUCATIONAL PRODUCT
THE INFORMATION ON THIS DOCUMENT IS THE PROPERTY OF BHARAT HEAVY ELECTRICALS LIMITED
IT MUST NOT BE USED DIRECTLY OR INDIRECTLY IN ANY WAY DETRIMENTAL TO THE INTEREST OF THE COMPANY

PRODUCED BY AN AUTODESK EDUCATIONAL PRODUCT

File No. HEP-TPTN0GMO(Misc)/229/2026-HEP-TXM20581 (Computer No. 319994)
Generated from eOffice by K V Suhas, DM(SKV)-MNX35408-HEP, DM, HEP-HEAVY ELECTRICALS PLANT (HEP) on 08/07/2026 08:27 am

C450056

TRACTION MACHINES DIVISIONAL STANDARDS

WL 3-1-1

SPRING WASHERS

WL 3-1-1

NOTES:-
1. MATERIAL TO BP10570.
2. HARDNESS OF FINISHED SPRING WASHER TO BE 438-480 HV.
3. WASHERS SHALL BE TESTED TO IS:3063.
4. ALTERNATIVELY WASHER CAN BE SUPPLIED AS PER AA7164001.

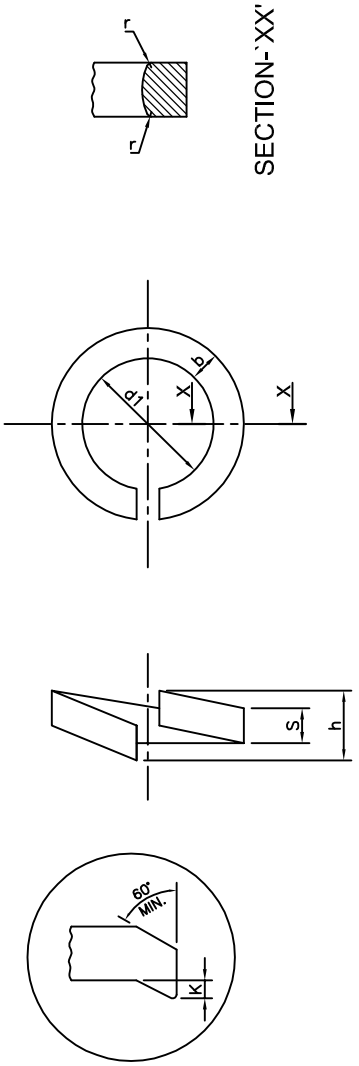

TABLE OF DIMENSIONS

ITEM NO.	NOMINAL SIZE	d_1	b	s	h	r	k	ST. NOS.	REMARKS
1	M6	6.1	2.5±.15	2.5±.15	5	0.5	0.2	459528	
2	M8	8.2	3±.2	2.5±.15	5.5	0.8	0.3	459529	
3	M10	10.2	3.5±.2	3±.2	6.5	0.8	0.3	460056	
4	M12	12.2	5±.2	3.5±.2	7.5	1.2	0.4	456182	
5	M16	16.2	5±.2	5±.2	10.5	1.2	0.4	456183	
6	M20	20.2	6±.2	6±.2	13	1.2	0.4	460057	
7	M24	24.5	8±.3	6±.2	13	2	0.5	452193	
8	M30	30.5	8±.3	6±.2	15	2	0.8	452194	
9	M36	36.5	10±.3	8±.3	17	2	0.8	452195	

REVISIONS

8	DRAWING DIGITIZED & UPDATED.	-17.03.15	REV. 9	NOTE-4 ADDED. A.JHARIA A.JAIN / -18.05.18
7	NOTE 3 MODIFIED.	-SD-28.03.99		
6	NOTES 1 & 2 WERE NOT ON. NOTE 3 WAS NOTE 2.			
5	NOTE 1 MODIFIED. TOLERANCES ON 'b' & 'S' WERE NOT ON.	-SD-/25.03.94		
4	DRAWING REDRAWN	-SD-		

ISSUED -SD-

APPD. -SD-

ISSUED BY TRACTION MACHINES D.O.

TME	001
R&D D STD. ENGG.	001
TXM	003
TNX	001

BHARAT HEAVY ELECTRICALS LTD.
BHOPAL

SCALE NTS | DRG NO. C450056 | REV. NO. 09

FIRST ANGLE PROJECTION

(ALL DIMENSIONS ARE IN mm)

DRG. No. 3 439 20 41 002

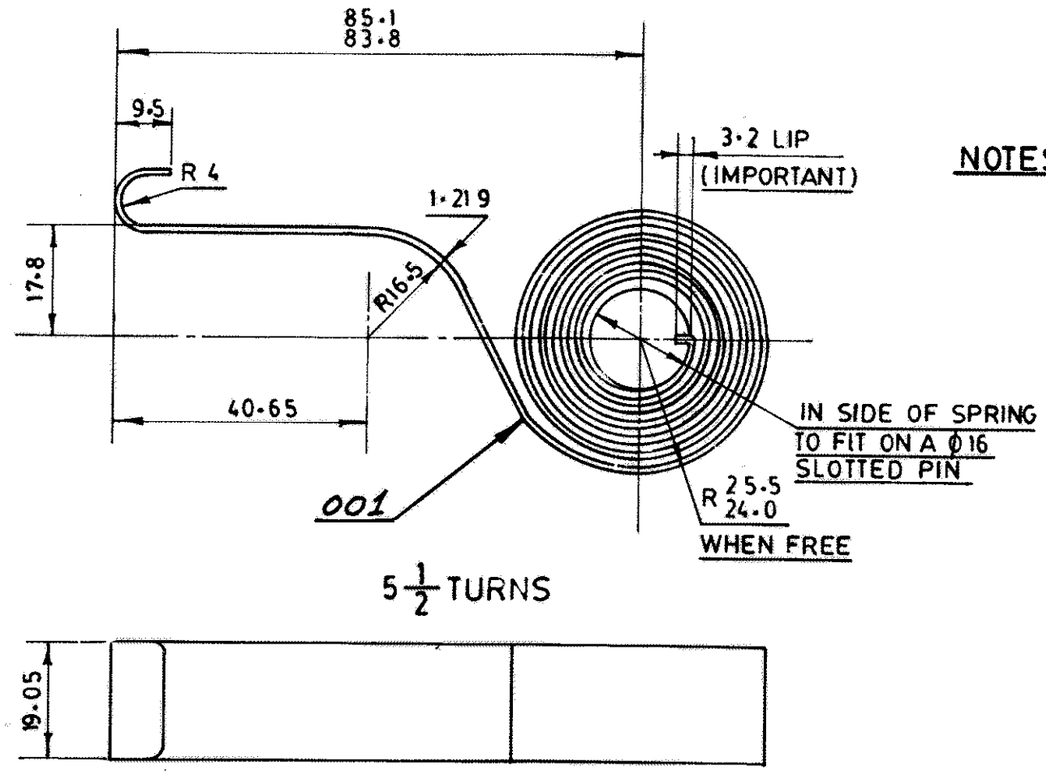

TOOL LIST CONTED.			TOOL LIST		
			IT.	TOOL	DESCRIPTION
	1406949	WINDING MANDREL O/D 14·5	001	1457931	BENDING TOOL
	1406950	RADIUS FORMING TOOL R 16·5 & R 4	001	1457932	MANDREL
	1406951	LOCATOR FOR END CUTTING 9·5		1406948	LIP BENDING TOOL

NOTES:-

1 ALTERNATIVELY SPRING TO BE MADE OF AA 10304· HEAT TREAT TO BRINELL HARDNESS -410/440.

2 REMOVE ALL SHARP EDGES & CORNERS.

3 FINGER PORTION OF SPRING MUST BE FLAT & SQUARE ACROSS THE WIDTH WHEN MOUNTED ON THE Ø16 SLOTTED PIN.

4 SPRING SHALL BE CAPABLE OF WITH STANDING 25000 CYCLES OF UP & DOWN MOVEMENT OF ITS· LIP BY 45mm· FROM ITS LOWEST POSITION; WHEN ASSEMBLED IN A BRUSH HOLDER & SET AT A LOAD OF 2·7 – 3·15 KGS, SPRING SHOULD NOT SHOW A VARIATION OF LOAD MORE THAN 0·25 KG.

5 SPRING IT·001 TO BE ZINC PLATED TO AA0673603 AND PASSIVATED TO AA0673604, WITH A PLATING THICKNESS OF 0·015 TO 0·020 MM. ALTERNATIVELY SPRINGS TO BE PARKERISED TO AA0673616

6 TOLERANCES ON UNTOLERATED DIMN TO BE ± 0·25 MM.

7. ALTERNATIVELY USE STAINLESS STEEL MATERIAL TO AISI-304 HARDNESS OF SPRING TO BE 40-45 RC.

THIS INFORMATION ON THE DOCUMENT IS THE PROPERTY OF BHARAT HEAVY ELECTRICALS LIMITED. IT MUST NOT BE USED DIRECTLY OR INDIRECTLY IN ANY WAY DETRIMENTAL TO THE INTEREST OF THE COMPANY.

REV	DATE	ALTD	CKD
06	6·2·01	RBV	

MIC REF TM 4303 BY & DY WAS NOT ON. ASSY. REF. 1439 20 80 006 WAS NOT ON.

VAR OO	REMARKS	VAR. No.	ITEM No.	DESCRIPTION	STD.	DRAWING No.	IT. No. / VAR.	MATL. CODE / MATL. SPECN.	A/C	UNIT	UNIT WT. / QTY.	GS
001	ST. 454162 SEE NOTE 7.		001	SPRING 1.219 TK·X 19.05 x638	2			BP 10570		KG	0·11	

CARD TYPE-3 / CARD TYPE-1 / CARD TYPE-2

D 4775801 REF. DRG. No.

REV	DATE	ALTD	CKD
05	19-3-97		
04	11-3-95		

TOOL NOS. 1406948, 1406949, 1406950, 1406951 WERE NOT ON. (TCM-248-B)

NOTE-7 WAS NOT ON.

SIGN. & DATE

ADDITIONAL INFORMATION

STATUS OF DRAWING

DISTRIBUTION OF PRINTS

TME – 1 TXM – 3
TNX – 1 TGM – 3

TYPE OF PRODUCT OR NAME OF CUSTOMER/PROJECT: TM 4601AZ, TM 4603BZ & TM 4303 BY, DY — MG DE LOCO AC EMU

BHARAT HEAVY ELECTRICALS LIMITED
JHANSI

	NAME	SIGN.	DATE
DRN.	BHADAURIA		8-1-88
CHD.	SGD		26.2.88
APPD	SKB		20.5.88

No. OF VAR. 00

DEPT	GRADE OF UN. TOL.		SCALE	WEIGHT (Kg.)	REF. TO ASSY. DRG.	ITEM No.	No. OF ITEMS
TME	DIM. C/M/F		NTS	0·11	0 439 20 40 001 / 1 439 20 80 006	009	001
CODE 405							

TITLE: BRUSH HOLDER SPRING

CARD CODE 1 3

DRAWING No. 3 439 20 41 002 REV. 06

SHEET No. 01 No. OF SHEETS 01

SIZE A3

INVENTORY No.

REV.	DATE	ALTERED	CHECKED
03	24-8-94		
02	13-10-92		
01	18-7-90		

NOTE-6 WAS NOT ON.

BOM UPDATED.

IN NOTE 5 ZINC PLATED & PASSIVATED PROC. SPEC. WERE NOT ON. PLATING THK. WAS NOT ON.

SES

File No. HEP-TPTN0GMO(Misc)/2297/2026-HEP-TXM20581 (Computer No. 319994)
Generated from eOffice by K V Suhas, DM(SKV)-MNX35408-HEP, DM, HEP-HEAVY ELECTRICALS PLANT (HEP) on 08/07/2026 08:27 am

2155855/2026/HEP-TXM20581

FIRST ANGLE PROJECTION (ALL DIMENSIONS ARE IN mm)

REV.	DATE		REV.	DATE	
		ALTERED	04	28.01.09	ALTERED KANSARA
		CHECKED			CHECKED
		APPROVED			APPROVED

DRAWING UPDATED &DIGITIZED

ADDITIONAL INFORMATION

STATUS OF DRAWING

DISTRIBUTION OF PRINTS: O/C - 1, TNX - 1, TXM - 3

TOOL LIST		
ITEM	TOOL	DESCRIPTION
001,002 & 003	1457500	DRILL JIG
001 & 002	1450318	VEE CLAMP
001 & 002	1451155	MILLING FIXTURE

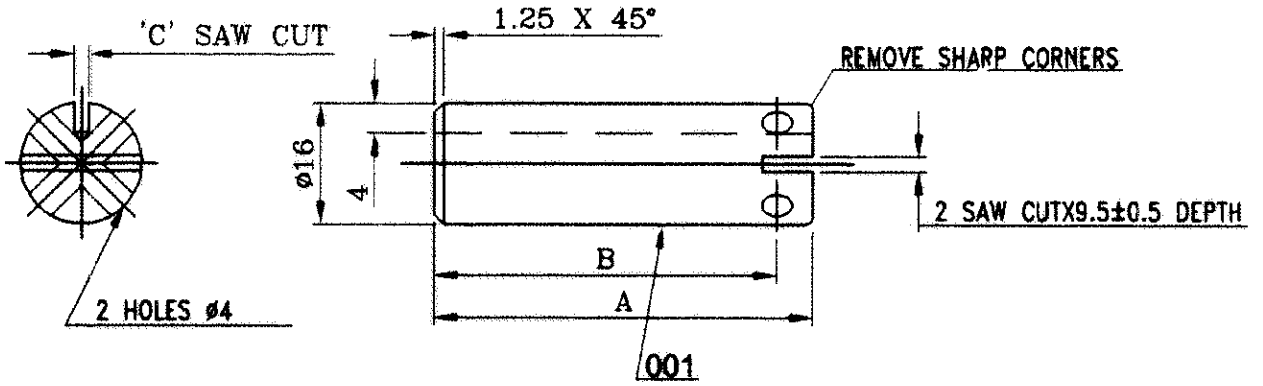

STYLE LIST		
VAR	IT.NO.	ST.NO
	001	BP9094760606

TABLE OF DIMENSION		
A	B	C
50	45.25	1.6

NOTES:-

1. ITEM 001 TO BE ZINC PLATED TO AA 0673603 & PASSIVATED TO AA 0673604 WITH A PLATING THICKNESS OF 0.015 TO 0.020MM.
2. ~~TOLERANCE ON DIMN TO BE ±0.25MM.~~

REMARKS	ITEM NO.	DESCRIPTION	STD	MATL. CODE / MATL. SPCN.	A/C	UNIT	UNIT WT. / QTY.
	001	PIN Ø16 X 50		AA 1010212052 / AA 10112	-	KG.	0.06

28 ——→ CARD TYPE-3 | 28 ——→ CARD TYPE-1 | 28 ——→ CARD TYPE-2

BHARAT HEAVY ELECTRICALS LTD. BHOPAL

	NAME	SIGN	DATE
DRN	BHADAURIA	Sd	31.1.88
CKD	SGD	Sd	26.2.88
APPD	SKB	Sd	20.5.88

NO. OF VAR.

DEPT	GRADE OF UNTOL.DIM.	SCALE	WEIGHT (K.G.)	REF. TO ASSY. DRG.	ITEM NO.	NO. OF ITEM
TME CODE 405	C/M/F AA 0230208	NTS	0.06	0 439 20 41 001	010	001

TITLE: BRUSH HOLDER SPRING PIN TM4601AZ, TM4603BZ

DRAWING NO. 4 439 20 41 001 REV. 04

SHT. No. 01 NO. OF SHT. 01

REF. DRG. NO. B 4900435

INVENTORY NO.

THE INFORMATION ON THIS DOCUMENT IS THE PROPERTY OF BHARAT HEAVY ELECTRICALS LIMITED
IT MUST NOT BE USED DIRECTLY OR INDIRECTLY IN ANY WAY DETRIMENTAL TO THE INTEREST OF THE COMPANY

File No. HEP-TEN0GMO(Misc)/229/2026-HEP-TXM20581 (Computer No. 319994)
Generated from eOffice by K V Suhas, DM(SKV)-MNX35408-HEP, DM, HEP-HEAVY ELECTRICALS PLANT (HEP) on 08/07/2026 08:27 am

FIRST ANGLE PROJECTION (ALL DIMENSIONS ARE IN m.m.)

REV	DATE	ALTERED R.B.V. / CHECKED	REV	DATE	ALTERED CKB / CHECKED
02	5-9-92		01	17-7-90	

IN BOM. MATL. SPEC. AA 10112 WAS BP 10172.& MAT. CODE WAS NOT ON.

IN NOTE 1 001 ZINC PLATED & PASSIVATED PROC. SPEC. WERE NOT ON. PLATING THICKNESS WAS NOT ON.

REV	DATE	ALTD
03	13-10-92	CKD

BOM UPDATED. 15/10

ADDITIONAL INFORMATION

STATUS OF DRAWING

DISTRIBUTION OF PRINTS TME-1, TXM-3 TNX(TXM)-1

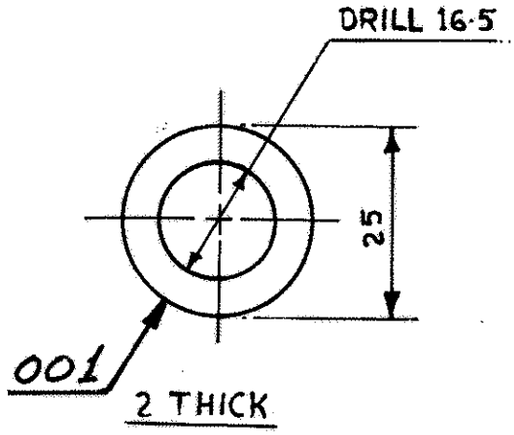

NOTE-1-
ITEM 001 TO BE ZINC PLATED TO AA0673603 AND PASSIVATED TO AA0673604, WITH A PLATING THICKNESS OF 0·015 TO 0·020.

REF. DRG. NO.	REMARK	ITEM NO.	DESCRIPTION	STD	MATL. CODE / MATL. SPCN.	A C	UNIT	UNIT WT. / QTY
B4900490	ST. NO. 454169 SEE NOTE	001	BRUSH GEAR SPACING WASHER ϕ25×2	1	AA 1010212125 / AA 10112	-	Kg	0.01

CARD TYPE-3 → 28 | 28 → CARD TYPE-1 | 28 → CARD TYPE-

SIGNS & DATE

BHARAT HEAVY ELECTRICALS LTD. BHOPAL

	NAME	SIGN	DATE
DRN	D.K. BATHAM		4 7 88
CHD	S.G.D		26.2.88
APPD	SKB		20.5.88

INVENTORY NO.

DEPT.	GRADE OF UN TOL DIM. C/M	SCALE	WEIGHT (Kg)	REF. TO ASSY. DRG.	ITEM NO.	NO. OF ITEM
TME CODE 405		1:1	0.01	0-439-20-41-001	011	001

TITLE: BRUSH GEAR SPACING WASHER TM4601 AZ, TM-4603 BZ

CARD CODE

DRAWING NO. 4-439-20-41-002 REV 03

SHEET NO. 01 NO OF SHEETS 01

SIZE A4

The information on this document is the Property of BHARAT HEAVY ELECTRICALS LIMITED it must not be used directly or indirectly in any way detrimental to the interest of the company.

बी एच ई एल BHEL	**CORPORATE PURCHASING SPECIFICATION**	AA19941 Rev No.02 PAGE 1 of 4

LEADED GUNMETAL SAND CASTINGS

1.0 GENERAL:

This specification governs the requirements of leaded gunmetal sand castings.

2.0 APPLICATION:

Suitable for general casting required for fair strength, soundness, good machinability and pressure tightness.

3.0 CONDITION OF DELIVERY: As specified in the order/drawing.

4.0 COMPLIANCE WITH NATIONAL STANDARDS:

IS:1458–1965, Class V – Specification for Railway Bronze Ingots and castings.

5.0 DIMENSIONS AND TOLERANCES:

The dimensions of the castings shall be in accordance with the drawings supplied with the order. All surfaces marked for machining shall have sufficient machining allowance but it shall not be too excessive resulting in more machining. For un-machined surfaces, unless otherwise stated in the order, the tolerance on linear dimensions and wall thickness shall be as per BHEL Standard AA0230402.

6.0 MANUFACTURE:

Sand Cast / Centrifugal cast, if specified on drawing or in purchase order.

7.0 FINISH:

All castings shall be properly fettled, dressed and all surfaces shall be thoroughly cleaned.

8.0 FREEDOM FROM DEFECTS:

The castings shall be free from defects such as blow holes, inclusions, shrinkage cavities, hard spots, cold shuts, cracks etc., which may adversely affect the machining and utility of castings. When it is necessary to remove the risers by flame cutting, care shall be taken to make the cut at a sufficient distance from the body of the casting so as to prevent any defect being introduced into the casting due to local heating.

COPYRIGHT AND CONFIDENTIAL
The Information on this document is the property of BHARAT HEAVY ELECTRICALS LIMITED.
It must not be used directly or indirectly in any way detrimental to the Interest of the company.

Revisions: Clause.25.1 of MOM of MRC-NFM+HE			**APPROVED:** INTERPLANT MATERIAL RATIONALISATION COMMITTEE – MRC(NFM+HE)		
Rev No.02	Amd No.	Reaffirmed	Prepared	Issued	Dt. of 1st Issue
Dt:17-05-2013	Dt:	Year:	14HEEP, Haridwar	Corp.R&D	October 1977

9.0 CHEMICAL COMPOSITION:

The chemical composition of the material, when analysed in accordance with IS:4027 (Part 1 to Part 9) (Methods for chemical analysis of Bronzes) or any other conventional/ instrumental methods, shall be as follows:

Element	Percent	
	Minimum	Maximum
*Tin	4.0	6.0
Lead	4.0	6.0
Zinc	4.0	6.0
Phosphorus	-	0.05
**Iron	-	0.3
**Antimony	-	0.3
Iron and Antimony	-	0.5
Aluminium	-	0.01
Total of other elements including Iron and antimony	-	0.6
Copper plus incidental nickel	Remainder	

* For the purpose of utilising scrap containing a high percentage of tin, it shall be permissible to supply ingots containing tin, up to maximum of 7.0 percent.

** Iron and antimony together shall not exceed 0.5 percent.

10.0 TEST SAMPLES:

One test specimen shall be selected from each melt for chemical analysis. Care shall be taken to discard the first drillings till a clean oxide free surface is reached.

One tensile test specimen shall be prepared from each melt/consignment.

One casting shall be taken up for fracture test from each melt/consignment.

Pressure Test:

The number of castings to be subjected to pressure test and the corresponding criteria for conformity shall be subject to agreement between the supplier and BHEL.

The cost of extra castings required in accordance with the sampling clauses for carrying out different tests shall be borne by the manufacturer

11.0 MECHANICAL PROPERTIES:

The material when tested in accordance with IS:1608, the material shall show the following tensile properties:

Method of Casting of Test pieces	Tensile Strength, N/mm^2 (kgf/mm^2) (Min)	%Elongation on $5.65\sqrt{S_0}$ (Min)	Hardness HB (Min)
Sand cast (Cast on)	185.0 (19.0)	8	60
Sand cast (Separately Cast)	205.0 (21.0)	12	65

12.0 FRACTURE TEST:

The sample of casting shall be broken in the presence of the representative from BHEL in such a manner that the area of fracture is as large as practicable in order to determine the uniformity of the grain structure of the metal. If the fracture shows segregation or dross or dirt spots or any other defect, all castings produced from the same melt shall be rejected.

13.0 OPTIONAL TEST:

If specified in the purchase order/drawing, the following additional tests shall be conducted on the castings.

1. Pressure Test
2. Radiographic Test

The requirements of these tests shall be as prescribed in the order/drawing or as mutually agreed.

14.0 REPAIR OF CASTINGS:

The castings shall not be repaired, unless permission in writing has been obtained previously from BHEL.

15.0 TEST CERTIFICATES:

The supplier shall submit five copies of test certificates giving the following information.

1) BHEL Order No.
2) AA19941, Rev.No.02: LEADED GUNMETAL SAND CASTINGS
3) Supplier's reference and Name
4) Heat No.
5) Results of chemical analysis, mechanical and all other tests as called for in this specification / order.
6) Drawing/Pattern No.
7) Consignment/Identification No.

In addition, supplier shall ensure to enclose one copy each of test certificate along with their despatch documents to facilitate quick clearance of the material.

CORPORATE PURCHASING SPECIFICATION

16.0 PACKING AND MARKING

Castings shall be suitably packed to prevent corrosion and damage during transit. Machined surface shall be properly protected with anti-corrosive compounds.

Each package or casting shall be legibly marked with the following information:

1) BHEL Order No.
2) AA19941
3) Heat No.
4) Identification Mark/No.
5) Weight
6) Supplier's reference and Name

17.0 REFERRED STANDARDS (Latest Publications including Amendments)

1) AA0230402 2) IS:4027 3) IS:1608

	CORPORATE PURCHASING SPECIFICATION	AA 256 01
		Rev. No. 01
		PAGE 1 OF 3

GLASS FIBRE WOVEN CLOTH

1.0 GENERAL:

This specification governs the quality requirements of Loom state Glass Fibre Cloth, woven plain from continuous filament yarn of type E, low alkali glass.

2.0 APPLICATION:

Used in the manufacture of composite insulation of electrical machines.

3.0 COMPLIANCE WITH NATIONAL STANDARDS:

There is no national standard covering this material. However, assistance has been taken from "BS 3396, Part I: Woven glass fibre fabrics for plastics reinforcement-Loom state fabrics and IS:5352: Glass fibre woven tape for electrical purposes", in preparation of this specification.

4.0 DIMENSIONS AND TOLERANCES:

Thickness, width and length /roll shall be as stated on BHEL order.

4.1 Thickness: See Annexure -I

4.2 Width:
The standard widths are 450, 700, 915 and 1000mm with tolerance of ± 10mm. However, any other width can also be ordered.

4.3 Length:
Unless otherwise specified, the fabric shall be supplied in continuous length of not less than 100 metres.

5.0 SAMPLE FOR TEST:
2 sq.metre of required thickness shall be sent for test and approval purposes.

6.0 TEST METHOD:

Unless other wise specified, the tests shall be conducted as per IS:5352.

7.0 PHYSICAL PROPERTIES:

7.1 Finish:
Shall be smooth and uniform, free from yarn defects and defect of weaving, streaks, stains, oil and grease spots, creases, wrinkles etc.

7.2 Texture: See Annexure - I
Other constructions may also be accepted against particular thickness, provided the cloth complies with all other characteristics specified in this specification.

COPYRIGHT AND CONFIDENTIAL
The Information on this document is the property of BHARAT HEAVY ELECTRICALS LIMITED
It must not be used directly or Indirectly in any way detrimental to the Interest of the company.

Revisions : Cl: 32.4.68 of MOM of MRC-E			APPROVED : INTERPLANT MATERIAL RATIONALISATION COMMITTEE-MRC (E)		
Rev. No. 01	Amd.No.	Reaffirmed	Prepared	Issued	Dt. of 1st Issue
Dt:15.01.2003	Dt :	Year :	BHOPAL	Corp. R&D	FEB., 1980

File No. HEP-TPTN0GMO(Misc)/229/2026-HEP-TXM20581 (Computer No. 319994)
Generated from eOffice by K V Suhas, DM(SKV)-MNX35408-HEP, DM, HEP-HEAVY ELECTRICALS PLANT (HEP) on 08/07/2026 08:27 am

7.3 Subatance: See Annexure - I

8.0 MECHANICAL PROPERTIES:

8.1 Breaking Strength:

8.1.1 As received: See Annexure - I

8.1.2 After ageing at 250^{0}C for 24 hrs:

The reduction shall not be more than 50% of the value in as received condition.

9.0 CHEMICAL PROPERTIES:

9.1 Glass Content: 98.5%, min.

10.0 TYPE TEST:

10.1 Conductivity of 1%aq. Extract: 70 micromhos /cm, max

10.2 pH of 1% aq. Extract: 8 to 10.

Note: Periodicity is once in two years or whenever there is a change in source or grade.

11.0 TEST CERTIFICATES:

Unless otherwise specified, three copies of test certificates shall be supplied alongwith each consignment.
In addition, the supplier shall ensure to enclose one copy of the test certificate along with their despatch documents to facilitate quick clearance of the material.

The test certificate shall bear the following information:

AA 25601 (Rev.No 01): Glass- Fibre Woven Cloth.
BHEL Order No.
Batch/Lot No.
Test values obtained / certificate for compliance of clauses 7 to 9, specifying the yarn count, actually used by the supplier.

12.0 PACKING AND MARKING:

The fabric shall be rolled evenly on tubes of sufficient length and strength to produce a firm package so as to prevent collapsing or telescoping during transit, storage and handling. Both ends of the roll shall be suitably protected to prevent damage to the edges of the cloth. Each roll shall be individually wrapped and rolls of fabric shall be securely packed in parcels or boxes in such a way as to protect them from damage.
Each roll of fabric and package shall be marked with the following information:
A 25601: Glass fibre woven cloth.
BHEL order No.
Manufacturer's / Supplier's Name and grade.
Batch/Lot No.
Thickness, Width & Length
Test certificate reference..

13.0 REFERRED STANDARDS (Latest Publications Including Amendments):

1) IS:5352 2) BS 3396, Part 1

File No. HEP-TPTN0GMO(Misc)/229/2026-HEP-TXM20581 (Computer No. 319994)
Generated from eOffice by K V Suhas, DM(SKV)-MNX35408-HEP, DM, HEP-HEAVY ELECTRICALS PLANT (HEP) on 08/07/2026 08:27 am

ANNEXURE - I

Nom. Tkns.	Tolerance on Thickness	Recommended BS: Designation	Substance (average)	Thread count (average) Nos. /10 cm		Yarn Count (nominal)		Breaking Strength (average) Kgf/cm, Min.	
(mm)	(mm)		(g/m^2)	Ends/Warp	Picks/Weft	Warp Tex	Weft Tex	Warp	Weft
0.025	± 0.002	-	24 ± 2	250 ± 6	235 ± 6	2.8-2/0	2.8-2/0	7.2	3.6
0.043	± 0.004	-	37 ± 4	216 ± 5	212 ± 5	5.5-1/2	5.5-1/0	8.3	4.0
0.05	± 0.005	P32/11	50 ± 5	252 ± 6	181 ± 5	11 -1/0	11 -1/0	9.7	7.0
0.08	± 0.008	P 2/11	100 ± 10	252 ± 6	173 ± 4	11 -1/2	11 -1/2	19.5	13.5
0.10	± 0.010	P36/33				33 -1/0	33 -1/0	12	10.5
0.125	± 0.012		125 ± 13	252 ± 6	158 ± 4	11 -1/3	11 -1/2	29	12
0.18	± 0.018	P41/66	200 ± 20	165 ± 4	126 ± 3	66 -1/0	66 -1/0	30	23
0.255	± 0.025	-	300 ± 30	118 ± 3	100 ± 3	22 -2/3	22 -2/3	50	40

Note: There shall be no minus tolerance on the above breaking strength.
A tolerance of - 20 percent shall be permitted on individual values.

File No. HEP-TPTN06MQ(Misc)/229/2026-HEP-TXM20581 (Computer No. 319994)
Generated from eOffice by K V Suhas, DM(SKV)-MNX35408-HEP, DM, HEP-HEAVY ELECTRICALS PLANT (HEP) on 08/07/2026 08:27 am

	CORPORATE PURCHASING SPECIFICATION	AA10112
		Rev No. 07
		PAGE 1 of 4

BRIGHT STEEL BARS AND SECTIONS (STANDARD QUALITY)

1 GENERAL:

This specification governs the quality requirements of Bright Steel Bars and Sections of standard quality, such as I-beams and equal angles required in very small sections.

2 APPLICATION:

Bars are used in the manufacture of threaded and machined components for general engineering purposes. Sections are used as stator spacer plate vents in generators.

3 CONDITION OF DELIVERY:

3.1 Round Bars - Class 4, surface quality.

Up to 50 mm diameter - Cold drawn.

Above 50mm diameter - Cold drawn or Hot rolled, turned and polished

3.2 Rectangular/Square/Hexagonal Bars - Class 3, surface quality.

All sizes - Cold drawn.

3.3 Sections - Class 4, surface quality.

All sizes - Cold drawn

3.4 Bars and sections shall be straight, with their ends sheared, square and true and shall have a smooth surface.

3.5 The bars and sections shall be given a clear temporary rust preventive (TRP) coating to avoid corrosion during transit and storage.

Black TRP coating is not acceptable.

Clear TRP used shall be free from pungent smell.

The following clear TRP's are suggested:

a) Servo RP 150 - M/s Indian Oil Corporation

b) HE - 1612 - M/s. BHEL, Bhopal

c) Rustilo DW-901 - M/s. Indrol Lubricants and Specialties Ltd.

d) Rustpro Special - M/s. Tide water oil co.

e) Any other clear TRP conforming to IS: 1154

4 COMPLIANCE WITH NATIONAL STANDARDS:

The material shall comply with the requirements of the following National standards and also meet the requirements of this specification.

IS: 9550-2001 : Bright steel bars

COPYRIGHT AND CONFIDENTIAL
The Information on this document is the property of BHARAT HEAVY ELECTRICALS LIMITED.
It must not be used directly or indirectly in any way detrimental to the Interest of the company.

Revisions:			APPROVED:		
Cl 27.2.d of MOM of MRC-S&GPS			INTERPLANT MATERIAL RATIONALISATION COMMITTEE – MRC(S&GPS)		
Rev No.07	Amd No.	Reaffirmed	Prepared	Issued	Dt. of 1st Issue
Dt:15-06-2005	Dt:	Year:2019	HEP, Bhopal	Corp.R&D	September 1976

RA5302

5 DIMENSIONS AND TOLERANCES:

5.1 Sizes:

Bars shall be supplied to the dimensions specified in BHEL order.

5.2 Tolerances:

5.2.1 Rectangular/Square/Hexagonal/Flat Bars:

Unless otherwise specified, tolerances on dimensions shall be as follows:

For drawn round bars and turned bars h10 to table 2 of IS:9550

For hexagonal and square drawn bars upto and including 80mm h11 and above 80mm h12 according to table 2 of IS:9550

For drawn flats in accordance with table 3 and 4 of IS:9550

For ground products in accordance with table 1 and 2 of IS:9550

5.2.2 Sections:

As specified in BHEL order/drawing.

5.3 Length:

Bar and sections shall be supplied in lengths of 2.5 to 4.5 meters with maximum 10% of shorts of not less than 1.5 meters.

5.4 Straightness:

Unless otherwise agreed to, the permissible deviation shall not exceed 1.5mm in any one meter length. Bars and sections shall be free from twists and bends.

6 MATERIAL:

The rolled bars used for purpose of producing the bright bars shall be such, so as to ensure freedom from segregation, piping and other harmful defects.

7 MANUFACTURE:

Steel shall be manufactured by the open-hearth, electric, basic oxygen or a combination of these processes.

8 FREEDOM FROM DEFECTS:

All finished steel bars and section shall be sound and free from internal and surface defects. They shall be bright and clean.

9 SURFACE CONDITION:

9.1 Round Bars and Sections:

Shall be entirely free from cracks and other surface defects.

9.2 Rectangular/Square/Hexagonal Bar-Type '3' Finish:

Shall comply with IS: 9550, Class 3 of table 5.

10 CHEMICAL COMPOSITION:

The melt analysis of steel and the permissible variation in the composition of the material form the melt analysis shall be as follows:

Element	Melt analysis percent, max	Permissible variation percent
Carbon	0.25	± 0.02
Sulphur	0.040	+ 0.005
Phosphorus	0.040	+ 0.005

11 TEST SAMPLES:

One sample for chemical and tensile test shall be selected from finished steel for every 20,000 kg or part thereof, with a minimum one per heat.

12 MECHANICAL PROPERTIES:

When tested in accordance with IS:1608, the test pieces shall show the following properties:

12.1 Rectangular/Square/Hexagonal/Section - Cold Drawn:

Tensile Strength : 440 N/mm^2, min

Elongation on 5.65$\sqrt{S_O}$ gauge length : 8 – 20%

12.2 Round Bars:

12.2.1 Bars upto 50mm Diameter – Cold Drawn

Tensile Strength : 440 N/mm^2, min

Elongation on 5.65$\sqrt{S_O}$ gauge length : 8 – 20%

12.2.2 Bars above 50mm Diameter:

Cold drawn or hot rolled, turned and polished.

Property		Hot rolled, turned and polished		Cold drawn
Tensile strength, min.	:	410 N/mm^2	OR	440 N/mm^2
Elongation on 5.65$\sqrt{S_O}$ gauge length	:	23%, min		8-20%

13 TEST CERTIFICATES:

Three copies of test certificates shall be supplied, unless otherwise stated on the order.

In addition, to the above, the supplier shall ensure to enclose one copy of the test certificate along with their despatch documents to facilitate quick clearance of the material.

The test certificate shall bear the following information:

AA10112; Rev. No. 07 :
BHEL order No,
<u>Supplier's Reference:</u>
Name
Identification No.
Melt No.
<u>Results of Tests:</u>
Dimensional inspection.
Results of Chemical analysis and mechanical tests.

File No. HEP-TPTN0GMO(Misc)/229/2026-HEP-TXM20581 (Computer No. 319994)
Generated from eOffice by K V Suhas, DM(SKV)-MNX35408-HEP, DM, HEP-HEAVY ELECTRICALS PLANT (HEP) on 08/07/2026 08:27 am

14 PACKING AND MARKING

The material shall be suitably packed in bundles – polythene wrapped to prevent sagging, corrosion and damage during transit. A suitable clear temporary rust preventive shall be applied all the bars as per clause 3.5 above and finally dispatched in wooden boxes.

Each bar over 50mm shall be stamped at one end with 'AA10112'. Bars 50mm and below shall be bundle together and tied with wire at 3 to 4 places along the length of the bar.

A metal label shall be securely attached to each bundle and shall bear the following information:

AA10112: BRIGHT STEEL BARS AND SECTIONS (STANDARD QUALITY)
BHEL Order No.
Consignment/Identification No.
Melt No.
Size and Weight.
Supplier's Name.

15 REFERRED STANDARDS (Latest Publications Including Amendments):

1) IS: 1154 2) IS: 1608 3) IS: 9550

	CORPORATE PURCHASING SPECIFICATION	AA 224 15
		Rev. No. 02
		PAGE 1 OF 5

EPOXY LAMINATED GLASS FABRIC BASE SHEET (TEMPERATURE INDEX 155)

COPYRIGHT AND CONFIDENTIAL
The Information on this document is the property of BHARAT HEAVY ELECTRICALS LIMITED
It must not be used directly or Indirectly in any way detrimental to the Interest of the company.

1.0 GENERAL:

This specification governs the quality requirements of laminated sheet made from layers of fine and plain woven glass fabric (non-alkaline glass type E) having suitable silane/volan finish with good electrical properties using thermosetting epoxy resin as the bonding medium. The material has a temperature index of at least 155.

2.0 APPLICATION:

This material may be used with discretion for insulating spacers, wedges, packers and pressed parts of electrical machines.

3.0 COMPLIANCE WITH NATIONAL STANDARDS:

The material shall comply, in general, with the requirements of the following standards and also meet the requirements of this specification.

NEMA-LI-1: 1989,Gr. G-11.

4.0 DIMENSIONS AND TOLERANCES:

4.1 Sizes:

Thickness, width and length shall be as stated on BHEL order.

4.2 Preferred thickness (mm):

0.5, 1, 1.5, 2, 3, 4, 5, 6, 8, 10, 12, 15, 20, 25, 30, 40, 50 and 70.
Other thickness can also be ordered.

4.3 Tolerances:

4.3.1 Thickness:

Thickness of the sheet shall not depart at any point from the nominal thickness by more than the appropriate value as shown in the following table:

Revisions : Cl: 32.4.43 of MOM of MRC-E			APPROVED : INTERPLANT MATERIAL RATIONALISATION COMMITTEE-MRC (E)		
Rev. No. 02	Amd.No.	Reaffirmed	Prepared	Issued	Dt. of 1st Issue
Dt:15.01.2003	Dt :	Year :	HYDERABAD	Corp. R&D	May, 1980

File No. HEP-TPTN0GMO(Misc)/229/2026-HEP-TXM20581 (Computer No. 319994)
Generated from eOffice by K V Suhas, DM(SKV)-MNX35408-HEP, DM, HEP-HEAVY ELECTRICALS PLANT (HEP) on 08/07/2026 08:27 am

Thickness, mm Above	upto & including	Permissible variation from nominal thickness, mm
-	0.5	0.10
0.5	2	0.20
2	3	0.25
3	5	0.50
5	7	0.75
7	10	0.90
10	15	1.10
15	20	1.25
20	25	1.40
25	30	1.50
30	40	1.75
40	50	2.00
50	60	2.50
60	70	3.00

4.3.2 Width and Length:

Size, mm	Tolerance, ± mm
Below 1000	35
Above 1000	50

4.4 Flatness (for sheets 3.0mm and above):

The flatness of sheets shall be such that when a sheet is placed without restraint on a flat surface, concave side, if present, up, departure at any point of the surface from a light straight edge laid in any direction upon it shall not exceed the following:

a) 0.50 mm under a 300 mm straight edge.
b) 3.00 mm under a 600 mm straight edge.
c) 6.00 mm under a 1000 mm straight edge.

5.0 FINISH:

The surface of the sheets shall be even, smooth, free from visible defects like blisters, loose fibres, resin concentration, delamination, wrinkles, local deformation and dents. The materials shall be supplied with trimmed edges.

6.0 TEST METHODS:

Unless otherwise specified the tests shall be conducted in accordance with the relevant methods of BHEL standard AA 085 17 01.

File No. HEP-TPTN0GMO(Misc)/229/2026-HEP-TXM20581 (Computer No. 319994)
Generated from eOffice by K V Suhas, DM(SKV)-MNX35408-HEP, DM, HEP-HEAVY ELECTRICALS PLANT (HEP) on 08/07/2026 08:27 am

7.0 SAMPLING AND ACCEPTANCE:

7.1 Routine and Acceptance Tests:

Unless otherwise stated, one sheet chosen at random out of every 20 sheets of a supply shall be subjected to routine tests. One sheet of 300 X 300 mm of 10 mm thickness shall be supplied with each consignment.

The arithmetic mean of the test results for an individual test shall meet the requirement of this specification.

The lowest value obtained for any test shall not be less than 90% at the specified value.

7.2 Type Tests:

Type tests shall be carried out at the time of first approval and subsequently once in two years and whenever doubt arises, on the quality of the material.

8.0 PHYSICAL PROPERTIES:

8.1 Specific Gravity : 1.8 ± 0.1

8.2 Marten's Heat distortion Temperature (Type test) (For thickness 10mm and above) : 240^0C, min

8.3 Water Absorption at 20^0 C for 24 hours (Type test):

Thickness (mm)		Water absorption
Above	**upto & including**	**%, max.**
-	1	0.40
1	1.5	0.30
1.5	3	0.20
3	10	0.15
10	25	0.10
More than 25*		0.10

* Thickness above 25 mm shall be machined to 25 mm keeping one side intact.

8.4 Texture of Glass Fabric:

For laminates upto 20 mm thickness a fine woven glass cloth of 0.18mm thick shall be used. For laminates above 20mm thickness a glass cloth of not more than 0.255 mm thick shall be used. This shall be checked by burning the bonding at 600^0C for sufficient time.

File No. HEP-TPTN0GMO(Misc)/229/2026-HEP-TXM20581 (Computer No. 319994)
Generated from eOffice by K V Suhas, DM(SKV)-MNX35408-HEP, DM, HEP-HEAVY ELECTRICALS PLANT (HEP) on 08/07/2026 08:27 am

8.5 Heat Shock Test:

A specimen of size 100x100 of ordered thickness is kept in an oven maintained at 250±5^0 C for 15 minutes. The specimen is removed directly to ambient conditions (ie. Room temperature) after this period and observed. The material is considered satisfactory in this test, if no delamination, cracks, splitting, blistering or resin oozing is observed at the end of the test.

9.0 MECHANICAL PROPERTIES:

9.1 Tensile Strength (For sheets 1.5 mm thick and above) (Type test):

250 N/mm^2 (25.5 kg/mm^2), min.

9.2 Cross Breaking Strength (For sheet 1.5 mm thick and above):

9.2.1 As received condition: 350 N/mm^2 (35.6 kg/mm^2), min.

9.2.2 After heating at 150^{0}C for 1 hour and tested at 150^{0}C. The reduction shall not be more than 50% of the value obtained in received condition.

9.3 Shear strength (for sheets 1.5 mm thick and above) (Type test):

100 N/mm^2 (10.2 kgf/mm^2), min.

9.4 Compression strength proof (For sheets 5 mm thick & above) (Type test):
400 N/mm^2 (40.8 kgf/mm^2).

9.5 Impact strength Charpy - Flatwise (For sheets 2.5 mm & above) (Type test):

Below 10 mm thick	:	75 kJ/m^2, min.
10 mm thick & above	:	150 kJ/m^2, min.

9.6 Splitting load, Edgewise (For sheets 10 mm thick and above): 2.94 kN (300 kg), min.

9.7 Punching (For sheets below 2.5 mm) (Type test):

When the sheet under test is pierced in a single operation with a pattern shown in IS: 1998. There shall not be excessive lifting or cracking around the holes.

9.8 Machinability (For sheets 3.0mm and above) (Type test):

The sheet shall be capable of being sawn, milled, drilled and tapped with a M3.5 tap and shall be capable of being shaped in a shaping machine without showing any sign of cracking or chipping.

10.0 ELECTRICAL PROPERTIES:

10.1 Insulation Resistance after 24 hours immersion in water at 27^{0}C (Type test):
10^4 Megohms, min.

File No. HEP-TPTN0GMO(Misc)/229/2026-HEP-TXM20581 (Computer No. 319994)
Generated from eOffice by K V Suhas, DM(SKV)-MNX35408-HEP, DM, HEP-HEAVY ELECTRICALS PLANT (HEP) on 08/07/2026 08:27 am

10.2 Electric Strength - Proof in oil at 90^0C:

10.2.1 Flatwise: Thickness upto & including 5mm : 14 kV/mm
above 5mm* : 12 kV/mm

10.2.2 Edgewise (For 5 mm and above) : 40 kV

* Thickness above 5mm shall be machined down to 5 mm keeping one surface intact.

10.3 Dissipation Factor (Tan delta) at 50 Hz (Type test) : 0.02, max.

10.4 Comparative Tracking Index (Type test) : 250, min.

11.0 TEST CERTIFICATES:

Unless otherwise specified, three copies of test certificates shall be supplied alongwith each Consignment.

In addition, the supplier shall ensure to enclose one copy of the test certificate along with their despatch documents to facilitate quick clearance of the material.

The test certificate shall bear the following information:

AA 22415 (Rev.No 02): Epoxy Laminated Glass Fabric Base Sheet.
BHEL Order No.
Supplier's Reference:
Batch/Lot No.
Test values obtained/Certificate for compliance for clauses 8.0 to 10.0 for all routine tests.

12.0 PACKING AND MARKING:

Identification slips shall be pasted suitably on all four corners of each board giving the size of the board and manufacturer's code number/grade. The boards shall be suitably packed in wooden case lined with water proof paper from inside. Each sheet should be separate from other sheet by a thick paper or card-board.

Each package shall be marked with the following information:

AA 22415: Epoxy Laminated Glass Fabric Base Sheet.

BHEL order No.
Manufacturer's / Supplier's Name
Batch/Lot No.
Thickness, Width and Length.
No. of sheets:
Net weight and Gross weight:
Test Certificate No.

13.0 REFERRED STANDARDS (Latest Publications Including Amendments) :

1) AA 085 17 01 2) IS;1998 3) NEMA - L1-1

File No. HEP-TPTN0GMO(Misc)/229/2026-HEP-TXM20581 (Computer No. 319994)
Generated from eOffice by K V Suhas, DM(SKV)-MNX35408-HEP, DM, HEP-HEAVY ELECTRICALS PLANT (HEP) on 08/07/2026 08:27 am

COPYRIGHT AND CONFIDENTIAL
The information on this document is the property of Bharat Heavy Electricals Limited, Bhopal.
It must not be used directly or indirectly in any way detrimental to be interest of the company

CHROMIUM VANADIUM SPRING STEEL STRIP COLD ROLLED -ANNEALED

1. GENERAL :

This specification governs the requirements of cold rolled, annealed springs steel strips from 0.10 to 5.00 mm thick.

Refer to BP 10571 for chrome vanadium spring steel wire annealed.

2. APPLICATION:

For the manufacture of springs.

3. CONDITION OF DELIVERY:

The material shall be supplied in coils in the fully annealed condition suitable for subsequent heat treatment.

The strips shall be supplied with sheared edges free from burrs, unless otherwise specified. The surface shall have a dull finished

The strips shall be treated with a continuous coating of oil containing rust and oxidation inhibitors.

4. COMPLIANCE WITH NATIONAL STANDARDS:

The material shall comply with the requirements of the following national standard and also meet the requirements of this specification.

IS: 2507 -1975: (Reaffirmed 2015) : "Specification for cold rolled steel strips for springs" Grade –.50Cr4V2

5. DIMENSION AND TOLERANCE:

5.1 Sizes:

All sizes shall be selected from table 2 and table 3 of IS 2507

5.2 Tolerance:

5.2.1 Thickness:
Tolerance of thickness of the steel strip shall comply with IS 2507 table 2. The thickness of the steel strips shall be measured at a position not less than 10% of the ordered width from the edge for widths up to and including 75 mm. For higher widths the position of measurement of thickness shall be not than 10 mm from edges.
The variation in thickness of the material across the width shall not exceed half the total tolerance.

5.2.2 Width:
Tolerance on width when supplied in sheared edges shall comply to IS:2507: Table 3.

5.2.3 Flatness:
When a 5-meter length of strip is allowed to lie on a flat surface by its own weight, no part of the strip shall lift more than 5 mm from the flat surface. For this purpose, raised should be measured from the surface nearer to the flat surface.

5.2.4 Edge Camber – (Lateral departure of the edge of the material from straight line forming a chord) shall not exceed the tolerance given in the table 4 of IS:2507

6. MANUFACTURE:
Steel shall be manufacture by the open hearth, electric, duplex, basic oxygen or a combination of these processes. Steel shall be of the killed type.

7. FREEDOM FRIM DEFECTS:
Strips shall be free from harmful defects such as scale, rust, blisters, laminations, cracked edges, burrs, etc.

8. RESPONSE TO HEAT TREATMENT:
Sample cut from the material, as received and hardened at a temperature of 830-860^0 C in oil followed by tempering at 420-440^0 C and air cooled shall have a hardness of 420-475 HV.

9.0 CHEMICAL COMPOSITION:
The melt analysis of the material and permissible variation in the composition of the product from the melt analysis shall be as follows:

Element	Melt analysis percent		Permissible variation percent
	% Min	%Max	
Carbon	0.45	0.55	± 0.03
Mangenese	0.50	0.80	± 0.04
Silicon	0.10	.035	± 0.03
Chromium	0.90	1.20	± 0.03
Vanadium	0.15	0.30	± 0.02
Sulphur	--	0.050	± 0.005
Phosphorus	--	0.050	± 0.005

File No. HEP-TPTNOGMO(Misc)/229/2026-HEP-TXM20581 (Computer No. 319994)
Generated from eOffice by K V Suhas, DM(SKV)-MNX35408-HEP, DM, HEP-HEAVY ELECTRICALS PLANT (HEP) on 08/07/2026 08:27 am

10.0 TEST SAMPLES:

10.1 One test sample shall be taken per size per heat per consignment.

10.1 Test pieces for mechanical properties shall be taken in the direction of rolling.

11.0 MECHANICAL PROPERTIES: As received.

11.1 Tensile:
When tested in accordance with IS 1608, the test pieces shall show the following properties in the longitudinal direction.

Tensile strength	:	780 N/mm^2 Max.
Yield strength	:	340 N/mm^2 Min
5.65 √so gauge length	:	20 percent Min.

11.2 Hardness:
When tested in accordance with IS 1501, the material shall show a Vickers hardness of 240 HV maximum.

12.0 TEST CERTIFICATE:
Three copies of a test certificate shall be supplied unless otherwise stated on the order. In addition, the supplier shall ensure to enclose one copy of the test certificate along with their dispatch document to facilitate to quick clearance of the material. The certificate shall bear the following information:
BHEL Reference

BP 10570 (Rev.07) :Chromium vanadium spring steel strip cold rolled -annealed

Order No

Supplier Name

Melt / Heat & Batch no

Identification No.

Result of tests:
Result of chemical analysis and mechanical tests and response to heat treatments (Cl.8)

13.0 PACKING & MARKING:
Strips shall be supplied in coils unless otherwise stated on the order. It shall be securely bound and packed in water – proof paper to withstand damage during transit. Each package shall bear a metal tag with the following information:

BP 10570 : Chromium vanadium spring strip cold rolled – annealed.
BHEL Order No
Supplier's Name
Consignment or identification no.
Size & weight

File No. HEP-TPTNOGMO(Misc)/229/2026-HEP-TXM20581 (Computer No. 319994)
Generated from eOffice by K V Suhas, DM(SKV)-MNX35408-HEP, DM, HEP-HEAVY ELECTRICALS PLANT (HEP) on 08/07/2026 08:27 am

	CORPORATE STANDARD	AA7121123
		Rev. No. 09
		PAGE 1 of 3

SCREWS, HEXAGON HEAD, PRODUCT GRADE 'A' COARSE PITCH, STEEL, PROPERTY CLASS 8.8 (M6 - M24)

1 DESIGNATION

A product Gr. A hexagon head, steel screws of thread M8, length 50mm, coarse pitch and conforming to property class 8.8 shall be designated as:

1.1 On drawings

i) Material specification column: AA7121123

ii) Description column: SCRU HEX A M8X50 - 8.8

1.2 On indents:

Screws Hex A M8 X 50 - 8.8; AA7121123

1.3 For issuing enquiries and on purchase orders:

While issuing enquiries and purchase orders delete BHEL standard number from the above description and add the information given under clause 2.

2 COMPLIANCE WITH STANDARDS

2.1 Dimensions, tolerances and general Requirements

As per IS 1364 : Part 2 : 2018

2.2 Mechanical Properties:

To conform to property class 8.8 as specified in Table - 3 of IS: 1367, Part 3.

Permissible hardness 238-350 HB for sizes M6-M10.

2.3 Threads

Pitch-coarse to IS: 4218, Part 2.

Tolerance quality - Medium.

Tolerance class - 6g.

2.4 Identification Marking:

As stated in clause 10 of IS 1367 : Part 3.

2.5 Surface Discontinuity

As per IS 1367 : Part 9 : Sec 1.

2.6 Finish

Plated as specified in BHEL order

COPYRIGHT AND CONFIDENTIAL
The Information on this document is the property of BHARAT HEAVY ELECTRICALS LIMITED.
It must not be used directly or indirectly in any way detrimental to the Interest of the company.

Revisions:			APPROVED: INTERPLANT MATERIAL RATIONALISATION COMMITTEE – MRC (Fasteners)		
Rev. No. 09	Amd. No.	Reaffirmed	Prepared HEEP, Haridwar	Issued Corp. R&D	Dt. of 1st Issue 01-01-1977
Dt: 20-03-2021	Dt:	Year: 33			

3 NOTE

3.1 Length and diameter combination (refer Table 1 on page 3 of 3) between the bold lines should only be used.

3.2 For screw threads, general (Metric) refer to BHEL standard AA0231800.

3.3 For tolerance grade, position and class refer to BHEL standard AA0230201.

3.4 Screws to this standard would be un-plated; divisions wishing to have plated bolts would have to get them plated.

3.5 Weights given in this standard are for general reference only and are not for commercial transactions.

3.6 When fasteners are to be tested with in BHEL, the sampling and acceptance plan shall be as per IS: 1367, Part 17.

4 REFERRED STANDARDS (Latest publications including amendment)

1) IS: 1364, Part.2
2) IS: 1367 Part.3, 9 : Sec 1 & 17
3) IS: 4218, Part.2
4) AA0230201
5) AA0231800
6) AA0231850

EXPLANATORY NOTE

The following changes have been made in the revision:

– In Clause 2.1, year of IS updated to 2018.
– In Clause 2.4, clause 10 in place of clause 9.2.1
– Clause 2.5, updated.

CORPORATE STANDARD

AA7121123
Rev. No. 09
PAGE 3 of 3

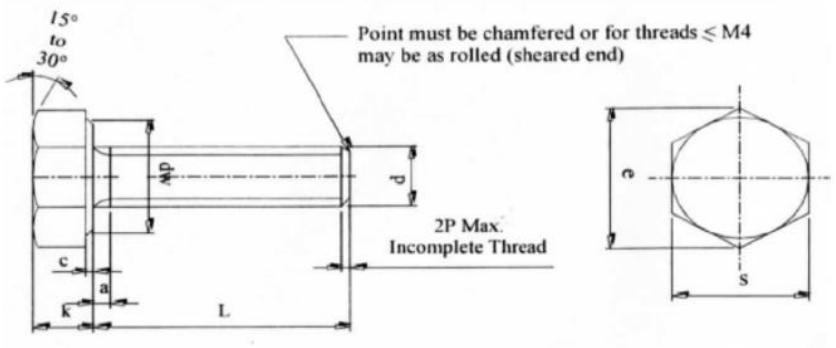

Note:
1. Corporate sub codes are only given in the Table-1
2. For thread runout refer AA0231850
3. Weights have been shown in kg per 1000 No.
4. Sizes beyond chain dotted lines are for Prod Gr. B

Table 1

All dimensions are in mm.

Thread Size d	Head					Washer			Un-threaded length a max	Sub-Code	Nom. Length (l)																							
	Flats S		Crns. e	Thickness k		Dia. d	Thickness C			Weight	10	12	14	16	20	25	30	35	40	45	50	55	60	65	70	75	80	85	90	100	110	120
	max	min	min	max	min	min	max	min																								
M6	10	9.78	11.05	4.15	3.85	8.9	0.5	0.15	3	Sub-Code	010	029	037	045	053	061	070	088											See Note-4			
										Weight	4.4	4.75	5.1	5.45	6.25	7.35	8.47	9.58														
M8	13	12.73	14.38	5.45	5.15	11.6	0.6	0.15	4	Sub-Code		096		100	118	126	134	142	150		169		177	185		193						
										Weight		9.96		11.2	12.5	14.3	16.3	18.2	20.2		24.2		28.1	30.1		34						
M10	16	15.73	17.77	6.58	6.22	14.6	0.6	0.15	4.5	Sub-Code				207	215	223	231	240	258	266	274	282	290	304	312				320	339		
										Weight				24.4	23.4	25.9	28.9	32	35.1	38.2	41.2	44.3	47.4	50.5	53.6				65.9	72		
M12	18	17.73	20.03	7.68	7.32	16.6	0.6	0.15	5.3	Sub-Code					347	355	363	371	380	398	401	410	428	436	444	452	460			479		
										Weight					33.7	37	41	45.4	49.9	54.3	58.7	63.6	67.6	72.1	76.5	80.9	85.4			103		
M16	24	23.67	26.75	10.18	9.82	22.5	0.8	0.2	6							487	495	509	517	525	533	541	550	568	576	584	592		606			
																71.7	78.4	85.1	92.2	100	108	115	123	131	139	147	155		171			
M20	30	29.67	33.53	12.72	12.28	28.2	0.8	0.2	7.5																							
M24	36	35.38	39.98	15.21	14.78	33.6	0.8	0.2	9																							

File No. HEP-TPTN0GMO(Misc)/229/2026-HEP-TXM20581 (Computer No. 319994)
Generated from eOffice by K V Suhas, DM(SKV)-MNX35408-HEP, DM, HEP-HEAVY ELECTRICALS PLANT (HEP) on 08/07/2026 08:27 am

बीएचईएल BHEL	**CORPORATE STANDARD**	AA7161001
		Rev. No. 04
		PAGE 1 of 3

WASHERS, MACHINED, STEEL

1 DESIGNATION

A machined washer of size 8.4 mm made of steel shall be designated as:

1.1 On drawings

i) Material specification column: AA7161001

ii) Description column: WASHER MCD 8.4-ST

1.2 On indents

Washer Machined 8.4 – Steel: AA7161001

1.3 For issuing enquiries and on purchase orders

While issuing enquiries and purchase orders, delete BHEL standard number from the above description and add the information given under clause 2.

2 COMPLIANCE WITH STANDARDS

2.1 Dimensions, Tolerances and General requirements

As per IS: 2016-1967, Table-1

2.2 Material

Steel as stated in IS: 2016

2.3 Finish

Plated as specified in BHEL order.

3 NOTE

3.1 For machined washers of brass, refer to BHEL standard AA7161002

3.2 For machined washers of copper, refer to BHEL standard AA7161004

3.3 Washers to this standard would be unplated, divisions wishing to have plated washers would have

3.4 For general requirements of washers, refer BHEL standard AA0230408

3.5 Weights given in this standard are for general reference only and are not meant for commercial transactions.

3.6 When fasteners are to be tested with in BHEL, the following sampling and acceptance plan based on IS: 6821 (Table-2) shall be followed for physical properties.

LOT SIZE	SAMPELE SIZE	ACCEPTANCE NOS.
Up to 1000	5	0
1001-3000	8	**0**
3003-10000	13	0
10001-35000	20	0
Over 35000	32	1

COPYRIGHT AND CONFIDENTIAL
The Information on this document is the property of BHARAT HEAVY ELECTRICALS LIMITED.
It must not be used directly or indirectly in any way detrimental to the Interest of the company.

Revisions: As per clause 29.4 of MOM of WG-F			**APPROVED:** INTERPLANT MATERIAL RATIONALISATION COMMITTEE – MRC (F)		
Rev. No. 04	Amd. No.	Reaffirmed	Prepared HPEP, Hyderabad	Issued Corp. R&D	Dt. of 1st Issue 01-01-1977
Dt: 15-04-2011	Dt:	Year: 2019 36			

CORPORATE STANDARD

4 REFERRED STANDARDS (Latest publications including amendment)

1) IS: 6821
2) AA0230408
3) AA7161002
4) AA7161004

EXPLANATORY NOTE

This standard was first issued in January 1977. The standard was based on IS:2016-1967 for dimensions, tolerances and general requirements. Subsequently many changes have been agreed upon at International & IPSC level and were reflected in IS: 2016-1967.

There is no change in IS: 2016-1967. This standard has been reviewed and brought up to date.

– Clause 3.6 “Sampling plan” for washers has been modified in line with IS: 6821
– Clause 4.0 has been modified accordingly.

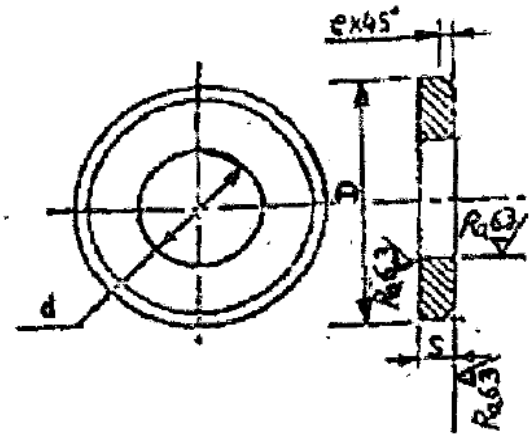

Note:

1) Corporate sub codes are shown in Table

2) Weights have been shown in kg per 1000 Nos.

Table 1

All dimensions in mm.

Size Nom. d h12	Outside diameter D		Thickness S		e nom	for bolt or screw size	Sub-code	Weight
	Basic	Tol.	Basic	Tol.				
1.7	4	$^{+0}_{-0.3}$	0.3	±0.1	0.1	M1.6		
2.2	5	$^{+0}_{-0.3}$	0.3	±0.1	0.1	M2	170	
2.7	6.5	$^{+0}_{-0.3}$	0.5	±0.1	0.2	M2.5	161	
3.2	7	$^{+0}_{-0.3}$	0.5	±0.1	0.2	M3	013	0.11
4.3	9	$^{+0}_{-0.3}$	0.8	±0.1	0.3	M4	021	0.29
5.3	10	$^{+0}_{-0.3}$	1	±0.1	0.4	M5	030	0.42
6.4	12.5	$^{+0}_{-0.4}$	1.6	±0.2	0.6	M6	048	1.08
8.4	17	$^{+0}_{-0.4}$	1.6	±0.2	0.6	M8	056	2.07
10.5	21	$^{+0}_{-0.5}$	2	±0.2	0.6	M10	064	3.98
13	24	$^{+0}_{-0.5}$	2.5	±0.3	0.6	M12	072	6.16
17	30	$^{+0}_{-0.5}$	3	±0.3	0.6	M16	080	11.17
21	37	$^{+0}_{-0.8}$	3	±0.3	1	M20	099	16.7
25	44	$^{+0}_{-0.8}$	4	±0.3	1	M24	102	31.78
31	56	$^{+0}_{-1.0}$	4	±0.3	1	M30	110	52.95
37	66	$^{+0}_{-1.0}$	5	±0.6	1.6	M36	129	89.99
43	78	$^{+0}_{-1.0}$	7	±1	1.6	M42	137	180.3
50	92	$^{+0}_{-1.5}$	8	±1	1.6	M48	145	291.26
58	105	$^{+0}_{-1.5}$	9	±1	1.6	M56	188	421.8
66	115	$^{+0}_{-1.5}$	9	±1	2	M64	153	486.45

	CORPORATE STANDARD	AA7121123
		Rev. No. 09
		PAGE 1 of 3

SCREWS, HEXAGON HEAD, PRODUCT GRADE 'A' COARSE PITCH, STEEL, PROPERTY CLASS 8.8 (M6 - M24)

1 DESIGNATION

A product Gr. A hexagon head, steel screws of thread M8, length 50mm, coarse pitch and conforming to property class 8.8 shall be designated as:

1.1 On drawings

i) Material specification column: AA7121123

ii) Description column: SCRU HEX A M8X50 - 8.8

1.2 On indents:

Screws Hex A M8 X 50 - 8.8; AA7121123

1.3 For issuing enquiries and on purchase orders:

While issuing enquiries and purchase orders delete BHEL standard number from the above description and add the information given under clause 2.

2 COMPLIANCE WITH STANDARDS

2.1 Dimensions, tolerances and general Requirements

As per IS 1364 : Part 2 : 2018

2.2 Mechanical Properties:

To conform to property class 8.8 as specified in Table - 3 of IS: 1367, Part 3.

Permissible hardness 238-350 HB for sizes M6-M10.

2.3 Threads

Pitch-coarse to IS: 4218, Part 2.

Tolerance quality - Medium.

Tolerance class - 6g.

2.4 Identification Marking:

As stated in clause 10 of IS 1367 : Part 3.

2.5 Surface Discontinuity

As per IS 1367 : Part 9 : Sec 1.

2.6 Finish

Plated as specified in BHEL order

COPYRIGHT AND CONFIDENTIAL
The Information on this document is the property of BHARAT HEAVY ELECTRICALS LIMITED.
It must not be used directly or indirectly in any way detrimental to the Interest of the company.

Revisions:			APPROVED: INTERPLANT MATERIAL RATIONALISATION COMMITTEE – MRC (Fasteners)		
Rev. No. 09	Amd. No.	Reaffirmed	Prepared HEEP, Haridwar	Issued Corp. R&D	Dt. of 1st Issue 01-01-1977
Dt: 20-03-2021	Dt:	Year: 39			

3 NOTE

3.1 Length and diameter combination (refer Table 1 on page 3 of 3) between the bold lines should only be used.

3.2 For screw threads, general (Metric) refer to BHEL standard AA0231800.

3.3 For tolerance grade, position and class refer to BHEL standard AA0230201.

3.4 Screws to this standard would be un-plated; divisions wishing to have plated bolts would have to get them plated.

3.5 Weights given in this standard are for general reference only and are not for commercial transactions.

3.6 When fasteners are to be tested with in BHEL, the sampling and acceptance plan shall be as per IS: 1367, Part 17.

4 REFERRED STANDARDS (Latest publications including amendment)

1) IS: 1364, Part.2
2) IS: 1367 Part.3, 9 : Sec 1 & 17
3) IS: 4218, Part.2
4) AA0230201
5) AA0231800
6) AA0231850

EXPLANATORY NOTE

The following changes have been made in the revision:

– In Clause 2.1, year of IS updated to 2018.
– In Clause 2.4, clause 10 in place of clause 9.2.1
– Clause 2.5, updated.

CORPORATE STANDARD

AA7121123
Rev. No. 09
PAGE 3 of 3

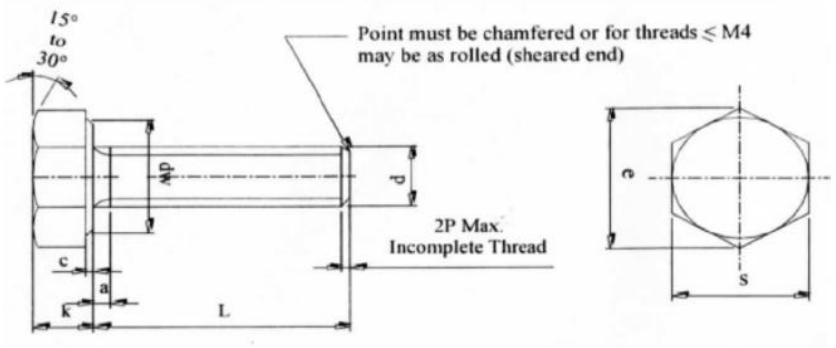

Note:
1. Corporate sub codes are only given in the Table-1
2. For thread runout refer AA0231850
3. Weights have been shown in kg per 1000 No.
4. Sizes beyond chain dotted lines are for Prod Gr. B

Table 1

All dimensions are in mm.

Thread Size d	Head					Washer			Un-threaded length a max	Sub-Code	Nom. Length (l)																							
	Flats S		Crns. e	Thickness k		Dia. d	Thickness C			Weight	10	12	14	16	20	25	30	35	40	45	50	55	60	65	70	75	80	85	90	100	110	120
	max	min	min	max	min	min	max	min																								
M6	10	9.78	11.05	4.15	3.85	8.9	0.5	0.15	3	Sub-Code	010	029	037	045	053	061	070	088											See Note-4			
										Weight	4.4	4.75	5.1	5.45	6.25	7.35	8.47	9.58														
M8	13	12.73	14.38	5.45	5.15	11.6	0.6	0.15	4	Sub-Code		096		100	118	126	134	142	150		169		177	185		193						
										Weight		9.96		11.2	12.5	14.3	16.3	18.2	20.2		24.2		28.1	30.1		34						
M10	16	15.73	17.77	6.58	6.22	14.6	0.6	0.15	4.5	Sub-Code				207	215	223	231	240	258	266	274	282	290	304	312				320	339		
										Weight				24.4	23.4	25.9	28.9	32	35.1	38.2	41.2	44.3	47.4	50.5	53.6				65.9	72		
M12	18	17.73	20.03	7.68	7.32	16.6	0.6	0.15	5.3	Sub-Code					347	355	363	371	380	398	401	410	428	436	444	452	460			479		
										Weight					33.7	37	41	45.4	49.9	54.3	58.7	63.6	67.6	72.1	76.5	80.9	85.4			103		
M16	24	23.67	26.75	10.18	9.82	22.5	0.8	0.2	6							487	495	509	517	525	533	541	550	568	576	584	592		606			
																71.7	78.4	85.1	92.2	100	108	115	123	131	139	147	155		171			
M20	30	29.67	33.53	12.72	12.28	28.2	0.8	0.2	7.5																							
M24	36	35.38	39.98	15.21	14.78	33.6	0.8	0.2	9																							

File No. HEP-TPTN0GMO(Misc)/229/2026-HEP-TXM20581 (Computer No. 319994)
Generated from eOffice by K V Suhas, DM(SKV)-MNX35408-HEP, DM, HEP-HEAVY ELECTRICALS PLANT (HEP) on 08/07/2026 08:27 am

BHARAT HEAVY ELECTRICALS LIMITED, BHOPAL

QUALITY ASSURANCE PLAN FOR BRUSH HOLDER ASSY TO BHEL ORDERING SPECIFICATION/DRAWING AS PER PO

QUALITY PLAN NO. – QAP/QTM/VENDOR QAP/2024-25/ BRUSH HOLDER ASSY DTD 11.11.2024 REV 00

Reference Document- PO DRAWING/SPECIFICATION

SL. NO	COMPONENT	CHARACTERISTICS	TYPE OF CHECK	QUANTAM OF CHECK		REFERENCE DOCUMENT	ACCEPTANCE NORMS	FORMAT OF RECORD	INSPECTION AGENCY	REMARKS
				TP	TPIA					
1)	Raw Material (all items)	Test	TC Verification	100%	100%	As per drawing & Specification	As per drawing & Specification	MTC	BHEL/TPIA	TEST LAB NABL/EQUIVALENT ACCERDITED/SOURCE MILL /Supplier to get the raw material correlated with material TC & invoice
2)	Dimension	Dimension	TC Verification & Measurement	100%	5%	As per drawing & specification	As per drawing & Specification	Supplier record	BHEL/TPIA	Supplier internal report for 100 % to be reviewed and 5 % to be Witness by TPIA
3)	Brush spring pressure	Routine test	TC Verification & testing	100%	5%	As per drawing & specification	As per drawing & Specification	Supplier record	BHEL/TPIA	Supplier internal report for 100 % to be reviewed and 5 % to be Witness by TPIA
4)	Zinc coating	Coating thickness	TC Verification & testing	100%	1 %	As per drawing & specification	As per drawing & specification	Supplier record	BHEL/TPIA	Supplier internal report for 100 % to be reviewed and 1 % to be Witness by TPIA
5)	Identification vendor name, PO & job serial no.	Visual	Visual	100%	10%	As per drawing & specification	As per drawing & Specification	Supplier record	BHEL/TPIA	Witness

Prepared By
अमित सेन / AMIT SEN
अभियंता / Engineer
क्यू. टी. एम. विभाग / Q.T.M. Division
बी.एच.ई.एल., भोपाल / B.H.E.L. BHOPAL

Approved By
गजेन्द्र सिंह राठौर / G.S. RATHORE
उप प्रबंधक / Dy. Manager
क्यू. टी. एम. विभाग / QTM Division
बी.एच.ई.एल., भोपाल / B.H.E.L., BHOPAL

2155855/2026/HEP-TXM20581
File No. HEP-TPTNOGMO(Misc)/229/2026-HEP-TXM20581 (Computer No. 319994)
Generated from eOffice by K V Suhas, DM(SKV)-MNX35408-HEP, DM, HEP-HEAVY ELECTRICALS PLANT (HEP) on 08/07/2026 08:27 am